SERVICE PARTS LIST

EXPLANATORY

- It will be noted that the items comprising an assembly (or sub-assembly) are offset for easy reference.

Example

12	**Gear assembly—idler**	**2A6198**
13	**Body**	**2A6199**
14	Seal	2A6201
15	Washer for seal	2A6186
16	Shaft	2A6187

- Where a modification to a part has taken place, or a new part issued replacing an original part, this is indicated by the inclusion of the new part number in the Modifications column.

- Abbreviations used:

A	**Ambulance**
C	**Chassis**
D	**Coupe**
E	**G.P.O. Engineers**
G	**G.P.O. Mail**
H	**Hearse**
J	**Convertible**
K	**Truck**
L	**Hire Car**
M	**Limousine**
N	**2-seater Tourer**
P	**Hard Top**
Q	**Chassis and Cab**
R	**Chassis and Scuttle**
S	**4-door Saloon**
2S	**2-door Saloon**
T	**4-seater Tourer**
U	**Pick-up**
V	**Van**
W	**Dual-purpose (wood framing)**
Ws	**Dual-purpose (all-metal)**
X	**Taxi**
UK	**Gt. Britain and Northern Ireland**
Not UK	**Not Gt. Britain and Northern Ireland**
RHD	**Right-hand drive**
LHD	**Left-hand drive**
RH	**Right-hand**
LH	**Left-hand**
HC	**High compression**
LC	**Low compression**
RHT	**Right-hand thread**
LHT	**Left-hand thread**
O/S	**Oversize**
U/S	**Undersize**
OD	**Outside diameter**
ID	**Inside diameter**
A/R	**As required**
Com.	**Commenced**
Fin.	**Finished**
No.	**Number**
NSP	**Non-serviceable part**
(B)	**Body number**
(C)	**Car number**
(D)	**De-luxe**
(E)	**Engine number**
(G)	**Gearbox number**
(S)	**Super de-luxe**
(CB)	**Cab number**
(OD)	**Overdrive number**
(RA)	**Rear axle number**

IMPORTANT TO OWNERS

B.M.C. SERVICE PARTS

All Authorized B.M.C. Distributors and Dealers are under contract to supply only genuine B.M.C. Parts.

Look for this sign or label

Replacement parts that are not of genuine B.M.C. manufacture cannot be relied upon to be of B.M.C. specification, material, and workmanship, and therefore B.M.C. cannot be expected to extend their Warranty to vehicles which have been fitted with parts not of their manufacture.

A comprehensive range of EXCHANGE UNITS is available. Ask your Distributor or Dealer for full details.

In order to ensure prompt and correct execution of your orders it is essential to:

STATE THE CAR, BODY, ENGINE NUMBERS, ETC., COMPLETE WITH PREFIXES AND SUFFIXES.

GIVE THE PART NUMBER AND DESCRIPTION (PREFIX LETTERS TO PART NUMBERS MUST ALWAYS BE QUOTED).

INDEX TO GROUPS, PAGES, AND ILLUSTRATIONS

Description	Page	Plate
Cylinder block—engine mounting plate	A.1, A.2	A
Connecting rods—camshaft—crankshaft—flywheel	A.3, A.4	AA
Cylinder head—valves—rocker cover—water outlet elbow—thermostat	A.5, A.6	AB
Cylinder covers—tachometer drive—gearbox mounting plate	A.7	AC
Oil pump—strainer—filter—oil reservoir	A.8, A.9	AD
Water pump—pulley—dynamo and distributor mounting—fan and fan belt	A.10, A.11	AE
Oil cooler	A.12	AF
Engine service kits	A.13	—
Inlet and exhaust manifolds	A.14	AG
Engine mountings	A.15	AH
Exhaust system	A.16	AJ
Engine controls	A.17	AK
Distributor—vacuum control—ignition coil—H.T. cables	B.1, B.2	B
Cooling system	C.1	C
Fuel tank—pipes—pump mounting	D.1, D.2	D
Fuel pump	D.3	DA
Carburetter	D.4	DB
Heat shield—air cleaner	D.5	DC
Clutch	E.1	E
Clutch pedal—pipes—cylinders	E.2, E.3	EA
Gearbox—standard	F.1–F.5	F
Propeller shaft	G.1	G
Rear axle	H.1, H.2	H
Rear brakes	H.3	HA
Rear spring	H.4	HB
Steering details	J.1, J.2	J
Front suspension	K.1–K.3	K
Front brakes	K.4	KA
Anti-roll bar	K.5	KB
Shock absorbers	L.1	L
Brake pedal and linkage	M.1	M
Brake master cylinder	M.2	MA
Hydraulic pipes and fittings	M.3	MB
Hand brake details	M.4, M.5	MC
Battery—dynamo	N.1	N
Starter	N.2	NA
Switches—control box—fusebox	N.3	NB
Headlamps	N.4	NC
Headlamps	N.5	ND
Sidelamp	N.6	NE
Rear lamp—number-plate lamp	N.7	NF
Flasher—horn and controls	N.8	NG
Windscreen wipers	N.9	NH
Wiring cables and connections	N.10, N.11	NJ
Instruments	O.1, O.2	O
Road wheels	P.1	P
Body shell	R.1, R.2	R
Body underframe	R.3	RA
Bonnet fittings	R.4	RB
Wings	R.5	RC
Boot lid fittings	R.6	RD
Door fittings	R.7, R.8	RE
Windows and window mechanism	R.9	RF
Windscreen and windscreen washer	R.10, R.11	RG
Hood	R.12	RH
Hood (folding)—tonneau cover	R.13, R.14	RJ
Bumpers and number-plates	R.15, R.16	RK
Fascia	R.17, R.18	RL
Trim—liners	R.19–R.22	RM
Trim—carpets	R.23, R.24	RN
Seats and seat fittings	R.25, R.26	RO
Heater and ventilating equipment	R.27, R.28	RP
Sundries	R.29, R.30	RQ

A

	Page
Absorber—front	K.1
Absorber—rear	L.1
Accelerator cable	A.17
Accelerator pedal	A.17
Adaptor—oil filter	A.9
Adjuster assembly—rear brakes	H.3
Adjuster nut—brake cable	M.4
Air cleaner	D.5
Anti-roll bar	K.5
Arm and blade assembly—wiper	N.9
Armature—dynamo	N.1
Armature—starter	N.2
Ashtray	R.30
Axle—rear	H.1
Axle—swivel	K.2

B

Badge—radiator grille	C.1
Bar—anti-roll	K.5
Bar—bumper	R.15
Bearing—clutch	E.1
Bearing—connecting rod	A.3
Bearing—differential	H.1
Bearing—front hub	K.3
Bearing—gearbox	F.1, F.2
Bearing—main—engine	A.3
Bearing—needle—propeller shaft	G.1
Bearing—rear axle	H.1, H.2
Bearing—rear hub	H.2
Bearing—steering pinion	J.1
Belt—fan	A.11
Bezel—radio aperture	R.18
Blade—windscreen wiper	N.9
Block—cylinder	A.1
Body shell	R.1
Body underframe	R.3
Bonnet lid	R.1
Boot lid	R.2
Boot—master cylinder push-rod	M.2
Boot—rear wheel cylinder	H.3
Boot—steering ball socket	J.1
Box—glove—fascia	R.17
Bracket—dynamo mounting	A.10
Bracket—engine mounting	A.15
Bracket—fuel pump	D.2
Bracket—rear shock absorber	H.4
Bracket—steering column	J.2
Brake—front	K.4
Brake—rear	H.3
Brake pedal	M.1
Buffer—bonnet lid	R.4
Bump rubber—rear spring	H.4
Bumpers and fittings	R.15, R.16
Bulb—lamps	N.4–N.7
Bulb—instruments	N.10
Bulk material—trim	R.22, R.24
Bush—front suspension	K.2
Bush—gearbox	F.3–F.5
Bush—gearbox rear extension support	A.15
Bush—hand brake lever	M.4
Bush—rocker—engine	A.5
Bush—rubber—rear spring	H.4

C

Cable—accelerator	A.17
Cable—bonnet release	R.4
Cable—choke	A.17
Cable—hand brake	M.4
Cable—harness	N.10
Cable—heat and air controls	R.28
Cable—revolution counter	O.1
Cable—speedometer	O.1
Cage—differential	H.1
Calliper unit—front brakes	K.4
Camshaft—engine	A.3
Cap—brake master cylinder	M.2
Cap—clutch master cylinder	E.2
Cap—fuel filler	D.1
Cap—oil filler tube	A.6
Cap—radiator	C.1
Cap—wheel	P.1
Carburetter	D.4
Carpets	R.23, R.24
Carrier—differential	H.1
Case—axle	H.1
Case—gearbox	F.1
Casing—windscreen wiper	N.9
Catch—bonnet safety	R.1
Chain—camshaft timing	A.4
Chain tensioner	A.4
Change speed lever	F.4, F.9
Channel—door glass	R.9
Choke control	A.17
Clamp—battery	N.1
Clamp—spare wheel	P.1
Cleaner—air	D.5
Clip—brake pipes	M.3
Clip—petrol pipe	D.1
Clip—steering rack seal	J.1
Clutch assembly	E.1
Coil—ignition	B.2
Column—steering	J.2
Connecting rods—engine	A.3
Control box	N.3
Controls—heat and air	R.28
Cooler—oil	A.12
Cooling system	C.1
Cover—clutch assembly	E.1
Cover—engine front	A.7
Cover—engine side	A.7
Cover—gearbox front and side	F.1
Cover—hood	R.12, R.13
Cover—hub	P.1
Cover—rocker	A.6
Cover—seat cushion	R.25
Cover—seat squab	R.26
Cover—tonneau	R.14
Crankshaft	A.3
Crown wheel and pinion	H.1
Cushion—seat	R.25, R.26
Cylinder—brake master	M.2
Cylinder—clutch master	E.2
Cylinder front and side covers	A.7
Cylinder head	A.5
Cylinder—wheel	H.3

D

Demister fittings	R.27
Dipper rod—engine	A.8
Dipper switch	N.3
Dipstick—gearbox	F.4
Distributor	B.1
Door assembly	R.2
Door fittings	R.7
Door seals	R.22
Draught excluder—gear lever	F.5
Drum—rear brake	H.3

	Page
Dynamo	N.1

E

Elbow—water outlet	A.6
Electrical equipment	N.1
Element—oil filter	A.9
Engine service kits	A.13
Exhaust manifold	A.14
Exhaust system	A.14
Extension—gearbox	F.1

F

Fascia panel	R.17
Fan—dynamo	A.10
Fan—water pump	A.10
Filler cap—radiator	C.1
Filter—oil	A.9
Finishers—door seals	R.8
Flange—yoke—propeller shaft	G.1
Flasher unit	N.8
Float—carburetter	D.4
Flywheel	A.4
Forks—gearbox	F.2
Frame—hood	R.12
Front brake	K.4
Front cover—gearbox	F.1
Front suspension	K.1
Fusebox	N.3

G

'G'—trunk lid	R.6
Gaskets—engine	A.13
Gauge—fuel	O.2
Gauge—oil and temperature	O.2
Gauge unit—fuel tank	D.1
Gear—camshaft	A.3
Gear—crankshaft	A.3
Gear—speedometer drive	F.4
Gear—tachometer drive	A.3
Gearbox	F.1
Glass—door	R.9
Glass—windscreen	R.10
Glovebox—fascia	R.17
Grille—air intake	R.4
Grille assembly—radiator	C.1
Grille—radio speaker	R.18
Grommets—dash bulkhead	R.29, R.30
Gudgeon pin	A.2
Guide—accelerator cable	A.17
Guide—exhaust valve	A.5

H

Hammer—copper	S.1
Hand brake assembly	M.4
Handle—door	R.7
Handle—remote control—door	R.7
Handle—window regulator	R.9
Harness cables	N.10
Head—cylinder	A.5
Headlamps	N.4, N.5
Heat shield—carburetter	D.5
Heater and ventilating equipment	R.27, R.28
Hinges—bonnet lid	R.1
Hinges—boot lid	R.2
Hinges—door	R.2
Hood assembly	R.12, R.13
Horn	N.8
Horn bracket	N.8
Horn push	N.8
Hose—air—demister	R.27
Hose—brake	M.3
Hose—clutch	E.2
Hose—fuel tank	D.1
Hose—radiator	C.1
Housing—distributor	A.10
Housing—tachometer pinion	A.7
Hub assembly—front	K.3
Hub assembly—rear	H.2
Hub caps	P.1
Hub extension—rear	H.2

I

Ignition coil	B.2
Induction heater—carburetter	D.5
Induction manifold	A.14
Instruments	O.1, O.2

J

Jet assembly—carburetter	D.4
Jet assembly—windscreen washer	R.11
Joint washer sets—engine	A.13
Journal assembly—propeller shaft	G.1

K

Key—boot lid lock	R.6
Key—door lock	R.7
Key—ignition	N.3
Kit—brake master cylinder repair	M.2
Kit—clutch cylinder repair	E.3
Kit—disc brake calliper repair	K.4
Kit—engine service	A.13
Kit—rear wheel cylinder repair	H.3
Knob—change speed lever	F.4
Knob—heat and air controls	R.28

L

Lamps—road	N.4–N.7
Layshaft—gearbox	F.3
Leaf—rear spring	H.4
Lever—change speed	F.4
Lever—clutch withdrawal	F.4
Lever—hand brake	M.4
Lever—selector—gearbox	F.4
Licence holder	R.29
Lid—bonnet	R.1
Lid—boot	R.2
Lid—glovebox	R.17
Liner assemblies—body trim	R.19–R.21
Lining—brake shoe—rear	H.3
Lining—clutch	E.1
Link—anti-roll bar	K.5
Link—dynamo adjusting	A.10
Link—rear shock absorber	L.1
Literature	S.1
Lock—boot lid	R.6
Lock assembly—door	R.7
Lock assembly—steering	J.2
Lock—glovebox	R.18
Lock—ignition switch	N.3

M

'M'—boot lid	R.6
Manifolds—inlet and exhaust	A.14

	Page
Master cylinder box	M.1
Master cylinder—brake	M.2
Master cylinder—clutch	E.2
Mats—floor	R.23
'MGB' motif—boot lid	R.6
'MG' motif—fascia panel	R.18
Mirror—rear view	R.29
Moulding—door	R.8
Moulding—front wing	R.5
Moulding—rear wing	R.5
Mounting—distributor	A.10
Mounting—dynamo	A.10
Mounting—engine	A.15
Mounting—exhaust	A.16
Mounting—gearbox	A.15
Motor—heater unit	R.27
Motor—windscreen wiper	N.9

N

Needle—carburetter	D.4
Nozzle assembly—demister	R.27
Nut—cylinder head	A.6
Nut—steering wheel	J.2
Nut—wheel studs	H.2, K.3
Number-plate and fittings	R.16

O

Oil cooler	A.12
Oil drain plug	A.8
Oil filter	A.9
Oil pump	A.8
Oil reservoir	A.8
Oil seal—hub	H.2, H.3
Over-rider	R.15

P

Pad—rubber—accelerator pedal	A.17
Pad—rubber—brake pedal	M.1
Pad—rubber—clutch pedal	E.2
Paint	S.1
Panel assembly—fascia	R.17
Pedal—accelerator	A.17
Pedal—brake	M.1
Pedal—clutch	E.2
Pillar—windscreen	R.10
Pinion—speedometer drive	F.3
Pinion—steering	J.1
Pipe assembly—oil filter	A.9
Pipe assembly—oil gauge	O.2
Pipe assembly—vacuum ignition	B.1
Pipe—brake	M.3
Pipe—clutch	E.2
Pipe—radiator	C.1
Pipes—fuel	D.1
Piping—fascia panel crash roll	R.22
Piston assembly—engine	A.2
Piston—brake master cylinder	M.2
Piston—clutch master cylinder	E.2
Piston—clutch slave cylinder	E.3
Piston—rear wheel cylinder	H.3
Plate—clutch driven	E.1
Plate—clutch pressure	E.1
Plate—engine mounting—front	A.2
Plate—gearbox mounting	A.7
Plate—rear brakes	H.3
Plug—oil reservoir drain	A.8
Plug—rear axle oil	H.1
Plug—sparking	A.6
Propeller shaft	G.1
Pulley—crankshaft	A.4
Pulley—dynamo	A.10
Pulley—water pump	A.10
Pump—fuel	D.3
Pump—oil	A.8
Pump—water	A.10
Pump—windscreen washer	R.11
Push-rod—brake master cylinder	M.2
Push-rod—clutch master cylinder	E.2
Push-rod—engine tappet	A.4

R

Rack assembly—steering	J.1
Radiator—cooling	C.1
Radiator—heater	R.27
Rail—tonneau cover support	R.14
Rear axle	H.1
Rear spring	H.4
Rebound strap	H.4
Regulator—door glass	R.9
Reservoir—engine oil	A.8
Reverse fork	F.2
Reverse gear	F.3
Revolution counter	O.1
Ring—engine piston	A.2
Ring—starter—flywheel	A.4
Rocker cover	A.6
Rocker shaft	A.5
Rod—oil level indicator—engine	A.8
Rod—oil level indicator—gearbox	F.4
Rubber—engine mounting	A.15

S

Seal—oil—engine front cover	A.7
Seal—oil—front hub	K.3
Seal—oil—gearbox	F.1, F.3
Seal—oil—rear axle	H.2
Seal—oil—rear hub	H.2
Seal—steering rack	J.1
Seats and fittings	R.25, R.26
Shackle—rear spring	H.10
Shaft—propeller	G.1
Shaft—rear axle	H.2
Shock absorber—front	K.1
Shock absorber—rear	L.1
Shoe—rear brake	H.3
Silencer—exhaust	A.14
Sleeve—yoke—propeller shaft	G.1
Slide—seat catch	R.26
Sparking plugs	A.6
Speedometer	O.1
Spring—accelerator pedal return	A.17
Spring—brake pedal return	M.1
Spring—change speed lever	F.4
Spring—clutch pedal return	E.2
Spring—coil—front suspension	K.1
Spring—engine valve	A.5
Spring—hand brake cable	M.4
Spring—road	H.4
Starter	N.2
Starter solenoid	N.3
Starting handle	S.1
Stay—bonnet lid	R.4
Stay—boot lid	R.6
Stay—engine steady	A.15
Steering column	J.2

	Page
Steering details	J.1, J.2
Steering lever	K.3
Steering wheel	J.2
Stowage bag—hood cover	R.12, R.13
Stowage bag—hood frame	R.12
Stowage bag—tonneau cover	R.14
Stowage bag—tonneau rail	R.14
Strainer—oil	A.8
Strap—fuel tank	D.1
Strap—rebound	H.4
Striker—boot lid lock	R.2
Striker—door lock	R.7
Stud—manifold	A.5
Sundries	R.29, R.30
Suppressor—ignition	B.2
Switch—dipper	N.3
Switch—direction indicator	N.8
Switch—headlamp flasher	N.3
Switch—heater	N.3
Switch—map light	N.3
Switch—panel light	N.3
Switch—road lights	N.3
Switch—starter and ignition	N.3
Switch—stop lamp	M.3
Swivel pin	K.1

T

	Page
Tachometer drive	A.7
Tank—fuel	D.1
Tank unit—fuel gauge	D.1
Tap—radiator drain	C.1
Tap—water drain—cylinder block	A.1
Tappet—engine	A.4
Thermostat	A.6
Tie-rod—steering	J.1
Tonneau cover	R.14
Tools	S.1
Trim—body	R.19–R.24

U

'U' clip—rear spring	H.4
Underframe—body	R.3
Unit—fuel tank gauge	D.1
Universal joint—steering column	J.2

V

Vacuum control pipe	B.1
Valve—engine	A.5
Valve—oil release	A.8
Vane—water pump	A.10
Ventilator grille—air intake	R.4
Ventilator assembly—door	R.9

W

Washer—windscreen	R.11
Water outlet elbow	A.6
Water pump	A.10
Water valve—heater	R.27
Weight—wheel balance	P.1
Wheel box—windscreen wiper	N.9
Wheel brace	S.1
Wheel—road	P.1
Wheel—steering	J.2
Wheel—wire	P.1
Windscreen wiper details	N.9
Wings	R.1, R.2
Wishbone assembly—front suspension	K.1

Y

Yoke—engine manifold	A.14
Yoke—propeller shaft	G.1

The following is a complete index of parts in this List, giving the page reference of each part number

Part Number	Page	Amdt. Number
1A1964	F.3	
1A2028	A.3	
1A2139	A.5	
1A2156	A.6	
1A2206	A.8	
1A3073	F.1	
1A3717	F.2	
1A4742	K.3	
2A128	A.10	
2A139	A.10	
2A150	A.6	
2A258	A.5	
2A259	A.5	
2A329	A.6	
2A459	B.1	
2A758	A.10	
2A759	A.3	
2A778	A.10	
2A847	A.10	
2A939	A.7	
2A3141	F.2	
2A3254	F.3	
2A3378	F.4	
2A4067	K.3	
2A5740	M.3	
2A7213	H.2	
2A7226	H.1	
2A9156	N.6	
12A24	A.7	
12A402	A.6	
12A403	A.6	
14A3823	R.29	
21A42	M.3	
21A979	J.2	
22A75	F.2	
22A75	F.4	
ACA5000	H.4	
ACA5118	J.1	
ACA5127	D.1	
ACA5216	S.1	
ACA5244	J.1	
ACA5290	D.6	
ACA5321	A.17	
ACA5421	O.2	
ACA5422	O.2	
ACA5432	S.1	
ACA5453	A.17	
ACA9685	N.8	
ACB5255	K.2	
ACB8474	O.1	
ACB8715	M.4	
ACB8754	E.2	
ACB9425	J.2	
ACC5062	A.17	
ACC8856	O.1	
ACG5001	H.4	
ACG5002	H.4	
ACG5184	D.6	
ACG6005	K.2	
ACH5031	C.1	
ACH5032	C.1	
ACH5101	M.4	
ACH5104	M.4	
ACH5854	D.1	
ACH6001	J.2	
ACH8508	M.4	
ACH8529	M.4	
ACH8650	M.3	
ACH9041	B.1	
ADA803	C.2	
ADA2889	R.23	
ADA5667	R.9	
ADA5668	R.7	
ADA5669	R.9	
ADA5698	R.6	
ADA5784	R.8	
ADB509	R.18	
ADB4811	R.23	
ADC560	N.9	
ADG474	R.16	
ADG1682	J.1	
ADH834	R.7	
ADH834	R.9	
ADH2475	R.6	
ADH2476	R.6	
AEA589	D.1	
AEC339	A.4	
AEC340	A.4	
AEC2075	A.17	
AEC2083	D.6	
AEG3101	F.4	
AEG3108	F.1	
AEH3242	F.2	
AEK113	A.5	
AEK122	C.1	
AEK123	C.1	
AFH1684	R.7	
AFH1837	R.22	
AFH1840	R.22	
AFH2546	R.1	
AFH2627	R.1	
AFH4835	R.22	
AFH4838	R.22	
AFH4839	R.22	
AFH6665	R.22	
AFH6667	R.22	
AHA5211	R.16	
AHA5435	J.2	
AHA5437	R.29	
AHA5543	R.1	
AHA5617	R.1	
AHA5791	R.16	
AHA5804	R.16	
AHA5937	R.22	
AHA5938	R.22	
AHA5939	R.22	
AHA5940	R.22	
AHA6280	N.11	
AHA6314	R.2	
AHA6315	R.2	
AHA6367	A.17	
AHH4001	K.1	
AHH4003	K.2	
AHH5016	H.4	
AHH5018	H.4	
AHH5019	H.4	
AHH5025	M.4	
AHH5027	A.15	
AHH5028	A.15	
AHH5065	A.15	
AHH5066	A.15	
AHH5067	H.4	
AHH5068	H.4	
AHH5100	E.2	
AHH5100	M.1	
AHH5143	C.1	
AHH5169	N.1	
AHH5171	A.14	
AHH5203	M.4	
AHH5224	M.4	
AHH5225	M.4	
AHH5227	M.4	
AHH5228	M.4	
AHH5255	R.18	
AHH5256	R.18	
AHH5258	R.18	
AHH5261	R.6	
AHH5295	M.5	
AHH5301	A.17	
AHH5308	A.17	
AHH5322	M.4	
AHH5403	A.16	
AHH5404	A.16	
AHH5433	R.17	
AHH5435	R.27	
AHH5448	N.11	
AHH5449	N.11	
AHH5452	N.11	
AHH5460	R.4	
AHH5467	H.4	
AHH5470	H.4	
AHH5510	R.26	
AHH5511	R.26	
AHH5512	R.26	
AHH5539	R.30	
AHH5712	R.16	
AHH5839	S.1	
AHH5897	K.1	
AHH5925	K.1	
AHH5927	K.5	
AHH5929	K.5	
AHH5939	K.5	
AHH5941	K.5	
AHH6000	J.2	
AHH6005	J.2	
AHH6006	J.2	
AHH6047	L.1	
AHH6048	L.1	
AHH6053	H.4	
AHH6056	A.15	
AHH6063	M.1	
AHH6065	M.1	
AHH6076	C.1	
AHH6079	R.6	
AHH6080	A.16	
AHH6081	A.16	
AHH6089	R.1	

Part Number	Page	Amdt. Number
AHH6091	J.1	
AHH6096	R.10	
AHH6102	R.4	
AHH6103	R.5	
AHH6104	R.5	
AHH6105	R.8	
AHH6106	R.8	
AHH6107	R.5	
AHH6108	R.5	
AHH6109	R.12	
AHH6110	R.12	
AHH6110	R.12	
AHH6121	J.1	
AHH6124	K.1	
AHH6132	P.1	
AHH6134	A.15	
AHH6142	R.18	
AHH6147	H.4	
AHH6153	M.1	
AHH6154	E.2	
AHH6155	M.1	
AHH6156	M.1	
AHH6160	R.26	
AHH6162	H.4	
AHH6163	M.1	
AHH6164	R.18	
AHH6165	R.28	
AHH6166	R.28	
AHH6169	R.18	
AHH6176	R.28	
AHH6179	R.6	
AHH6180	R.6	
AHH6181	R.6	
AHH6182	R.18	
AHH6190	R.27	
AHH6192	R.28	
AHH6195	K.1	
AHH6204	K.1	
AHH6205	K.1	
AHH6206	K.1	
AHH6207	K.1	
AHH6208	R.15	
AHH6209	R.15	
AHH6209	R.15	
AHH6210	R.15	
AHH6215	R.15	
AHH6216	R.15	
AHH6217	R.16	
AHH6218	R.15	
AHH6219	R.15	
AHH6220	M.4	
AHH6221	M.4	
AHH6228	M.4	
AHH6229	M.4	
AHH6230	M.4	
AHH6231	M.4	
AHH6232	M.4	
AHH6233	M.4	
AHH6234	M.4	
AHH6235	M.4	
AHH6236	M.4	
AHH6237	M.5	
AHH6241	R.5	
AHH6242	R.5	
AHH6245	R.5	
AHH6246	R.5	
AHH6247	M.3	
AHH6247	O.2	
AHH6249	R.7	
AHH6250	R.15	
AHH6252	D.1	
AHH6253	D.1	
AHH6257	D.1	
AHH6260	R.30	
AHH6261	R.15	
AHH6262	R.12	
AHH6262	R.13	
AHH6268	D.1	
AHH6270	R.8	
AHH6271	R.8	
AHH6272	N.3	
AHH6273	R.7	
AHH6275	N.8	
AHH6276	R.28	
AHH6280	D.1	
AHH6281	D.1	
AHH6282	R.16	
AHH6283	R.16	
AHH6284	R.29	
AHH6285	R.29	
AHH6286	R.29	
AHH6287	R.29	
AHH6289	R.9	
AHH6290	R.30	
AHH6291	R.18	
AHH6292	R.18	
AHH6293	R.17	
AHH6294	R.30	
AHH6295	R.30	
AHH6297	P.1	
AHH6298	A.15	
AHH6303	R.9	
AHH6304	R.9	
AHH6310	J.2	
AHH6311	J.2	
AHH6312	J.2	
AHH6314	N.8	
AHH6315	N.8	
AHH6316	N.8	
AHH6317	N.8	
AHH6318	N.8	
AHH6319	N.8	
AHH6320	C.1	
AHH6321	C.1	
AHH6322	C.1	
AHH6323	R.8	
AHH6324	R.8	
AHH6325	R.4	
AHH6326	R.6	
AHH6329	R.18	
AHH6330	R.18	
AHH6331	R.18	
AHH6332	N.8	
AHH6333	N.8	
AHH6334	N.8	
AHH6335	R.16	
AHH6336	R.9	
AHH6337	R.9	
AHH6338	R.17	
AHH6339	R.17	
AHH6341	R.9	
AHH6342	R.9	
AHH6343	R.9	
AHH6344	R.9	
AHH6345	R.9	
AHH6346	R.9	
AHH6347	R.9	
AHH6348	R.8	
AHH6349	R.8	
AHH6350	F.5	
AHH6351	N.1	
AHH6352	R.3	
AHH6353	N.1	
AHH6354	N.11	
AHH6355	H.4	
AHH6356	R.29	
AHH6358	A.16	
AHH6360	R.5	
AHH6360	R.8	
AHH6360	R.22	
AHH6361	R.5	
AHH6361	R.8	
AHH6362	E.2	
AHH6364	M.3	
AHH6365	M.3	
AHH6366	M.3	
AHH6367	M.3	
AHH6368	M.3	
AHH6370	M.3	
AHH6380	R.9	
AHH6381	R.9	
AHH6384	R.10	
AHH6385	R.10	
AHH6388	R.10	
AHH6392	R.10	
AHH6393	R.10	
AHH6394	R.10	
AHH6395	R.10	
AHH6398	N.7	
AHH6399	N.7	
AHH6402	R.10	
AHH6403	R.10	
AHH6404	R.10	
AHH6407	R.10	
AHH6408	R.10	
AHH6409	R.10	
AHH6411	R.10	
AHH6412	R.10	
AHH6413	R.10	
AHH6414	R.10	
AHH6416	R.22	
AHH6417	R.22	
AHH6418	R.22	
AHH6422	R.19	
AHH6423	R.19	
AHH6424	R.19	
AHH6425	R.19	
AHH6426	R.4	
AHH6434	R.9	
AHH6438	R.12	
AHH6438	R.13	
AHH6439	R.12	
AHH6439	R.13	
AHH6440	R.12	
AHH6440	R.13	
AHH6443	R.23	
AHH6446	H.4	
AHH6447	D.6	
AHH6448	D.6	
AHH6451	K.1	
AHH6452	H.4	
AHH6453	H.4	
AHH6454	H.4	
AHH6456	H.4	
AHH6463	H.4	
AHH6464	D.6	
AHH6465	D.6	
AHH6478	R.29	
AHH6479	A.16	
AHH6480	A.16	
AHH6481	G.1	
AHH6483	P.1	
AHH6486	F.5	
AHH6487	P.1	
AHH6489	R.15	
AHH6490	R.15	
AHH6494	A.17	
AHH6495	R.10	
AHH6497	A.17	
AHH6501	A.17	
AHH6503	A.17	
AHH6504	A.17	
AHH6505	E.2	
AHH6506	M.1	
AHH6507	R.29	
AHH6508	R.19	
AHH6509	R.19	
AHH6510	M.1	

Part Number	Page	Amdt. Number
AHH6511	M.1	
AHH6513	R.7	
AHH6514	K.2	
AHH6516	R.10	
AHH6517	R.10	
AHH6523	R.4	
AHH6524	R.12	
AHH6527	R.27	
AHH6528	R.27	
AHH6529	R.14	
AHH6530	R.14	
AHH6535	R.6	
AHH6536	R.10	
AHH6538	S.1	
AHH6539	S.1	
AHH6540	S.1	
AHH6541	K.5	
AHH6542	K.5	
AHH6543	K.5	
AHH6544	K.5	
AHH6546	K.5	
AHH6547	R.7	
AHH6548	R.4	
AHH6550	R.9	
AHH6551	A.12	
AHH6553	E.2	
AHH6554	O.2	
AHH6661	R.7	
AHH6662	R.7	
AHH6666	R.7	
AHH6667	R.7	
AHH6668	R.7	
AHH6669	R.7	
AHH6670	R.7	
AHH6671	R.7	
AHH6672	R.7	
AHH6673	R.7	
AHH6674	R.7	
AHH6675	R.7	
AHH6676	R.7	
AHH6678	O.2	
AHH6690	N.10	
AHH6703	D.1	
AHH6705	D.1	
AHH6707	D.1	
AHH6708	D.2	
AHH6709	D.2	
AHH6713	R.17	
AHH6715	A.12	
AHH6716	R.8	
AHH6718	R.5	
AHH6719	R.5	
AHH6725	A.17	
AHH6726	A.17	
AHH6727	A.17	
AHH6728	R.29	
AHH6731	A.17	
AHH6732	D.5	
AHH6734	A.17	
AHH6742	R.18	
AHH6745	R.7	
AHH6750	N.1	
AHH6752	M.3	
AHH6753	R.18	
AHH6754	R.12	
AHH6755	R.12	
AHH6757	R.14	
AHH6760	R.13	
AHH6760	R.14	
AHH6761	R.4	
AHH6762	R.4	
AHH6823	R.14	
AHH6824	R.14	
AHH6825	R.14	
AHH6826	R.14	
AHH6827	R.14	
AHH6828	R.14	
AHH6835	R.12	
AHH6836	R.12	
AHH6837	R.12	
AHH6838	R.13	
AHH6839	R.13	
AHH6840	R.13	
AHH6842	R.24	
AHH6843	R.24	
AHH6844	R.24	
AHH6845	R.3	
AHH6857	B.2	
AHH6863	A.12	
AHH6864	A.12	
AHH6865	A.12	
AHH6866	A.12	
AHH6881	R.13	
AHH6882	R.12	
AHH6882	R.13	
AHH6882	R.14	
AHH6883	R.12	
AHH6884	R.12	
AHH6884	R.13	
AHH6884	R.14	
AHH6885	R.13	
AHH6886	R.23	
AHH6887	R.23	
AHH6888	R.23	
AHH6889	R.23	
AHH6890	R.23	
AHH6891	R.23	
AHH6892	R.23	
AHH6893	R.23	
AHH6894	R.23	
AHH6895	R.23	
AHH6896	R.23	
AHH6897	R.23	
AHH6898	R.23	
AHH6899	R.23	
AHH6900	R.23	
AHH6901	R.23	
AHH6902	R.23	
AHH6903	R.23	
AHH6904	R.23	
AHH6905	R.23	
AHH6906	R.23	
AHH6907	R.23	
AHH6908	R.23	
AHH6909	R.23	
AHH6910	R.14	
AHH6911	R.14	
AHH6912	R.14	
AHH6913	R.14	
AHH6914	R.14	
AHH6915	R.14	
AHH6916	R.15	
AHH6919	M.1	
AHH6921	R.23	
AHH6922	R.23	
AHH6923	R.23	
AHH6924	R.13	
AHH6925	R.13	
AHH6926	R.13	
AHH6939	R.26	
AHH6943	R.29	
AHH6945	R.10	
AHH8008	P.1	
AHH8009	P.1	
AJD7042	A.17	
AJD7162	R.15	
AJD7712	A.17	
AJD7722	R.6	
AJD7732	R.4	
AJD8012Z	D.4	
AJH5079	N.9	
AJH5176	O.1	
AJH5178	O.1	
AJH5185	O.2	
AJH5186	O.2	
AKE4479	R.19	
AKE4480	R.19	
AKE4481	R.19	
AKE4482	R.19	
AKE4483	R.19	
AKE4484	R.19	
AKE4485	R.19	
AKE4486	R.19	
AKE4487	R.25	
AKE4488	R.25	
AKE4489	R.25	
AKE4490	R.25	
AKE4491	R.25	
AKE4492	R.25	
AKE4493	R.26	
AKE4494	R.26	
AKE4495	R.26	
AKE4496	R.26	
AKE4497	R.26	
AKE4498	R.26	
AKE4499	R.25	
AKE4500	R.25	
AKE4501	R.25	
AKE4502	R.25	
AKE4503	R.25	
AKE4504	R.25	
AKE4505	R.26	
AKE4506	R.26	
AKE4507	R.26	
AKE4508	R.26	
AKE4509	R.26	
AKE4510	R.26	
AKE4511	R.25	
AKE4511	R.26	
AKE4512	R.25	
AKE4512	R.26	
AKE4513	R.25	
AKE4513	R.26	
AKE4514	R.25	
AKE4514	R.26	
AKE4515	R.25	
AKE4515	R.26	
AKE4516	R.25	
AKE4516	R.26	
AKE4517	R.18	
AKE4518	R.18	
AKE4519	R.18	
AKE4520	R.18	
AKE4521	R.20	
AKE4522	R.20	
AKE4523	R.20	
AKE4524	R.20	
AKE4525	R.20	
AKE4526	R.20	
AKE4527	R.20	
AKE4528	R.20	
AKE4529	R.20	
AKE4530	R.20	
AKE4531	R.20	
AKE4532	R.20	
AKE4533	R.20	
AKE4534	R.20	
AKE4535	R.20	
AKE4536	R.20	
AKE4537	R.20	
AKE4538	R.20	
AKE4539	R.20	
AKE4540	R.20	
AKE4541	R.20	
AKE4542	R.20	

Part Number	Page	Amdt. Number
AKE4543	R.20	
AKE4544	R.20	
AKE4545	R.20	
AKE4546	R.20	
AKE4547	R.20	
AKE4548	R.20	
AKE4549	R.20	
AKE4550	R.20	
AKE4551	R.20	
AKE4552	R.20	
AKE4553	R.20	
AKE4554	R.21	
AKE4555	R.21	
AKE4556	R.21	
AKE4557	R.21	
AKE4558	R.21	
AKE4559	R.21	
AKE4560	R.21	
AKE4561	R.21	
AKE4562	R.21	
AKE4563	R.21	
AKE4564	R.21	
AKE4565	R.21	
AKE4566	R.21	
AKE4567	R.21	
AKE4568	R.21	
AKE4569	R.19	
AKE4570	R.19	
AKE4601	R.12	
AKE4602	R.12	
AKE4603	R.12	
AKE4607	R.13	
AKE4608	R.13	
AKE4609	R.13	
AMK8847	R.27	
ANK3458	N.9	
ANK4646	N.3	
ANK4646	R.6	
ANK4646	R.7	
ANK4646	R.18	
ARA922	C.1	
ARA1211	C.1	
ARA1238	C.1	
ARH59	R.18	
ARH143	C.1	
ARH155	C.1	
ARH176	D.1	
ARH179	A.16	
ARH181	A.12	
ARH517	C.1	
ARH649	C.1	
ARH673	D.1	
ARH952	A.16	
ARH1050	C.1	
ARH1541	C.1	
ARH1790	C.1	
ARH1795	C.1	
ARH1797	C.1	
ARH1799	C.1	
ARH1800	C.1	
ARH1801	C.1	
ARH1809	A.16	
ARH1810	A.16	
ARH1811	A.16	
ARH1813	A.16	
ARO4566	D.1	
ARO9399	C.1	
ATA7043	H.1	
ATA7047	H.2	
ATB4074	K.4	
ATB4131	K.3	
ATB4238	K.3	
ATB4239	K.3	
ATB4240	K.3	
ATB4241	K.3	
ATB4242	K.3	
ATB7059	H.2	
ATB7064	H.2	
ATB7065	H.2	
ATB7066	H.2	
ATB7067	H.2	
ATB7068	H.2	
ATB7069	H.2	
ATB7070	H.2	
ATB7071	H.2	
ATB7072	H.1	
ATB7102	H.2	
ATB7103	H.2	
ATB7104	H.2	
ATB7105	H.2	
ATB7106	H.2	
ATB7107	H.2	
ATB7108	H.2	
ATB7123	H.1	
ATB7181	H.1	
ATB7289	H.1	
ATB7854	H.2	
ATC4240	K.2	
ATC4246	K.2	
ATC4247	K.2	
ATC4248	K.2	
ATC4249	K.3	
ATC4261	K.2	
ATC4262	K.2	
ATC4263	K.2	
ATC4264	K.2	
ATC4265	K.3	
ATC7084	H.1	
AUA150	D.3	
AUA504	D.3	
AUA565	D.3	
AUA566	D.3	
AUA585	D.3	
AUA692	D.3	
AUA699	D.3	
AUA839	D.3	
AUA840	D.3	
AUA878	D.3	
AUA887	D.3	
AUA1405	D.3	
AUA1421	D.3	
AUA1422	D.3	
AUA1433	D.3	
AUA1435	D.3	
AUA1442	D.3	
AUA1447	D.3	
AUA1455	D.3	
AUA1456	D.3	
AUA1459	D.3	
AUA1464	D.3	
AUA1468	D.3	
AUA1479	D.3	
AUA1661	D.3	
AUA1662	D.3	
AUA1822	D.3	
AUA1863	D.3	
AUA4080	D.3	
AUA4081	D.3	
AUA4082	D.3	
AUA4083	D.3	
AUA4643	D.3	
AUA5059	D.3	
AUA5060	D.3	
AUA5078	D.3	
AUA6021	D.3	
AUA6034	D.3	
AUA6036	D.3	
AUB521	D.3	
AUB6004	D.3	
AUB6007	D.3	
AUB6015	D.3	
AUC1145	D.4	
AUC1151	D.4	
AUC1152	D.4	
AUC1206	D.5	
AUC1249	D.4	
AUC1250	D.4	
AUC1302	D.4	
AUC1310	D.4	
AUC1317	D.4	
AUC1318	D.4	
AUC1319	D.4	
AUC1329	D.4	
AUC1358	D.4	
AUC1366	D.4	
AUC1367	D.4	
AUC1374	D.5	
AUC1375	D.5	
AUC1400	D.5	
AUC1424	D.5	
AUC1426	D.5	
AUC1462	D.5	
AUC2002	D.4	
AUC2057	D.4	
AUC2114	D.4	
AUC2175	D.4	
AUC2246	D.4	
AUC2451	D.5	
AUC2625	D.5	
AUC2694	D.5	
AUC3116	D.4	
AUC4387	D.4	
AUC4900	D.4	
AUC5002	D.5	
AUC5032	D.5	
AUC8070	D.4	
AUC8114	D.4	
AUC8170	D.4	
AUC8396	D.5	
AUC8457	D.5	
AUC8459	D.4	
AUC8460	D.4	
AUC8461	D.4	
AUC8462	D.5	
AUC8473	D.5	
AUC8478	D.4	
AUC8483	D.5	
AUC8667	D.4	
AUC8723	D.4	
AUC8734	D.4	
AUC8965	D.5	
AUC9186	D.4	
AUC9187	D.4	
AUD52	D.4	
AUD1005	D.4	
AUD2049	D.5	
AUD2050	D.5	
AUD2076	D.5	
AUD2101	D.4	
AUD2163	D.5	
AUD2164	D.5	
AUD2173	D.5	
AUD2176	D.5	
AUD2177	D.5	
AUD9002	D.5	
AUD9072	D.4	

Part Number	Page	Amdt. Number
AUD9073	D.4	
AUD9085	D.4	
AUD9086	D.4	
AUD9140	D.6	
1B1063	A.8	
1B1735	A.8	
1B3363	F.3	
1B3664	A.6	
1B3664	F.5	
1B7240	H.2	
1B7356	K.5	
1B8036	P.1	
1B8037	P.1	
1B8038	P.1	
1B8039	P.1	
1B8077	P.1	
1B8078	P.1	
1B8347	A.15	
1B8859	M.4	
1B8995	S.1	
11B2011	D.1	
11B2037	O.2	
11B5074	A.15	
11B5166	S.1	
12B120	A.3	
12B121	A.3	
12B173	A.10	
12B174	A.10	
12B207	A.1	
12B012003	A.3	
12B012103	A.3	
14B630	R.29	
14B934	R.18	
14B1730	R.12	
14B2685	R.29	
22B56	F.4	
22B66	E.1	
BCA4031	M.3	
BCA4294	N.3	
BCA4309	B.2	
BCA4312	N.3	
BCA4501	N.3	
BDH741	R.18	
BDH1750	R.30	
BFS207	N.7	
BFS355	N.4	
BFS380	N.7	
BFS382	N.6	
BFS382	N.7	
BFS410	N.5	
BFS411	N.5	
BFS987	N.10	
BFS987	N.11	
BFS989	N.6	
BHA4082	R.4	
BHA4082	R.6	
BHA4116	N.3	
BHA4130	N.10	
BHA4132	R.27	
BHA4175	N.7	
BHA4176	N.7	
BHA4212	O.1	
BHA4214	O.2	
BHA4235	N.4	
BHA4235	N.5	
BHA4237	N.3	
BHA4238	N.6	
BHA4239	N.6	
BHA4242	N.7	
BHA4251	R.29	
BHA4261	M.2	
BHA4278	N.3	
BHA4280	N.3	
BHA4283	N.7	
BHA4286	O.1	
BHA4287	O.1	
BHA4291	O.1	
BHA4292	D.1	
BHA4295	O.2	
BHA4296	O.2	
BHA4297	M.3	
BHA4310	E.3	
BHA4314	O.1	
BHA4320	N.9	
BHA4321	N.9	
BHA4322	N.9	
BHA4323	N.9	
BHA4324	N.9	
BHA4325	R.27	
BHA4326	R.28	
BHA4327	R.28	
BHA4328	R.28	
BHA4329	R.28	
BHA4330	R.28	
BHA4331	R.28	
BHA4332	R.28	
BHA4333	R.28	
BHA4334	R.28	
BHA4335	R.28	
BHA4336	R.28	
BHA4337	R.28	
BHA4338	R.1	
BHA4344	N.10	
BHA4345	N.10	
BHA4347	N.11	
BHA4348	N.11	
BHA4349	N.11	
BHA4355	R.23	
BHA4356	N.11	
BLS109	F.3	
BLS109	F.4	
BLS110	F.2	
BLS110	F.4	
BMK735	N.3	
BNN105	A.14	
BRP906	R.5	
BRP1104	R.9	
BRT2404	D.1	
BTB150	H.1	
BTB153	H.2	
BTB157	H.3	
BTB183	K.3	
BTB187	K.3	
BTB198	K.4	
BTB207	H.2	
BTB253	H.2	
BTB314	H.1	
BTB328	H.1	
BTB332	H.2	
BTB333	H.2	
BTB334	H.2	
BTB335	H.2	
BTB336	H.2	
BTB337	H.2	
BTB338	H.3	
BTB346	K.3	
BTB347	K.3	
BTB350	K.2	
BTB354	H.2	
BTB354	K.3	
BTB361	K.3	
BTB366	H.3	
BTB367	H.3	
BTB370	K.4	
BTB371	K.4	
BTB387	K.4	
BTB392	K.2	
BTB393	K.2	
BTB396	K.3	
BTB410	K.3	
BTB411	K.2	
BTB412	K.4	
BTB413	K.4	
BTB414	H.1	
BTB533	H.1	
BTB534	H.1	
BTC114	K.4	
BTC280	K.3	
CCN212	J.2	
CCN240	F.1	
CFP375	R.29	
CFP625	R.29	
CFP750	R.29	
CFP1000	R.29	
CHS2513	A.14	
CHS2513	F.1	
CHS2522	A.14	
CLZ0427	D.1	
CLZ0514	E.2	
CLZ0514	M.1	
CMP0308	R.10	
CMP0310	R.10	
CMZ0307	R.10	
CMZ0310	R.19	
CMZ0318	N.3	
CMZ0410	H.2	
CMZ0410	H.3	
CMZ0412	R.7	
CMZ0148	R.26	
CMZ0512	R.2	
CMZ0516	A.15	
CMZ0520	R.2	
CNZ102	B.1	
CNZ102	R.7	
CNZ102	R.18	
CTP604	R.8	
CTZ604	R.12	
CTZ604	R.13	
CTZ804	R.19	
11D5264	E.3	
11D5264	M.2	
17D11	A.10	
DAP0820	R.8	
DMP0721	R.5	
DMP0721	R.8	
DMP0819	R.8	
DMP0824	R.12	
DMP0829	R.12	
DMP0829	R.13	
DMP0829	R.14	

Part Number	Page	Amdt. Number
DMP0829	R.21	
DMP0835	R.23	
DMP3040	R.10	
2F4249	A.8	
FHS2513	A.5	
FNN105	A.6	
FNN105	A.8	
FNN107	H.1	
FNN207	N.1	
FNN504	F.2	
FNP103	R.10	
FNZ103	A.12	
FNZ103	A.17	
FNZ103	C.2	
FNZ103	K.5	
FNZ103	M.5	
FNZ103	N.3	
FNZ103	N.4	
FNZ103	N.8	
FNZ103	N.10	
FNZ103	R.4	
FNZ103	R.5	
FNZ103	R.8	
FNZ103	R.14	
FNZ103	R.17	
FNZ103	R.18	
FNZ103	R.19	
FNZ103	R.22	
FNZ103	R.27	
FNZ104	A.16	
FNZ104	A.17	
FNZ104	B.2	
FNZ104	D.1	
FNZ104	D.2	
FNZ104	H.3	
FNZ104	K.1	
FNZ104	M.3	
FNZ104	M.4	
FNZ104	M.5	
FNZ104	N.8	
FNZ104	R.1	
FNZ104	R.9	
FNZ104	R.16	
FNZ104	R.26	
FNZ104	R.29	
FNZ105	A.2	
FNZ105	A.6	
FNZ105	A.7	
FNZ105	A.14	
FNZ105	A.15	
FNZ105	A.16	
FNZ105	C.1	
FNZ105	E.2	
FNZ105	F.1	
FNZ105	H.1	
FNZ105	H.4	
FNZ105	J.2	
FNZ105	K.1	
FNZ105	K.2	
FNZ105	M.2	
FNZ105	M.3	
FNZ105	M.4	
FNZ105	R.17	
FNZ106	A.15	
FNZ106	H.1	
FNZ106	H.3	
FNZ106	H.4	
FNZ106	M.1	
FNZ106	M.4	
FNZ106	R.15	
FNZ107	H.4	
FNZ107	L.1	
FNZ107	R.2	
FNZ107	R.15	
FNZ107	R.16	
FNZ108	K.5	
FNZ108	L.1	
FNZ108	R.16	
FNZ204	N.1	
FNZ205	H.4	
FNZ205	R.9	
FNZ206	M.3	
FNZ308	K.1	
FNZ407	K.1	
FNZ408	K.1	
FNZ408	K.2	
FNZ505	F.5	
FNZ506	A.4	
FNZ506	A.10	
FNZ506	K.4	
FNZ612	F.2	
FNZ612	H.2	
FWP208	R.18	
FWP708	R.17	
FWZ208	R.18	
1G752	A.1	
1G765	A.3	
1G1167	A.3	
1G1282	A.6	
1G1319	A.4	
1G1452	A.8	
1G2285	A.10	
1G2295	A.5	
1G2342	A.6	
1G2398	A.7	
1G2399	A.7	
1G2401	A.7	
1G2417	A.14	
1G2418	A.14	
1G2522	A.5	
1G2602	A.7	
1G2673	B.2	
1G2953	A.6	
1G2984	A.4	
1G3268	F.3	
1G3331	F.3	
1G3492	F.3	
1G3530	F.2	
1G3576	F.3	
1G3577	F.3	
1G3578	F.3	
1G3579	F.3	
1G3580	F.3	
1G3581	F.3	
1G3584	F.2	
1G3586	F.2	
1G3594	F.3	
1G3597	F.4	
1G3598	F.4	
1G3656	F.1	
1G3658	F.1	
1G3666	F.1	
1G3667	F.4	
1G3680	F.4	
1G3706	F.4	
1G3707	F.4	
1G3708	F.2	
1G3711	F.4	
1G3712	F.1	
1G3802	F.4	
1G3809	F.1	
1G3810	F.1	
1G3863	F.4	
1G3927	F.4	
1G4271	K.2	
1G4349	K.1	
1G7436	H.2	
1G7439	H.2	
1G7444	H.1	
1G7445	H.1	
1G7448	H.1	
1G7465	H.1	
1G7582	H.1	
1G7584	H.1	
1G7600	H.1	
1G8775	A.15	
1G8781	A.15	
1G8782	A.15	
1G9198	M.3	
1G9384	A.15	
4G1588	R.1	
4G2494	R.1	
4G2541	R.29	
4G3035	R.1	
4G3676	R.1	
4G9763	R.30	
8G505	D.1	
8G536	B.2	
8G555	H.2	
8G619	A.9	
8G621	K.1	
8G654	D.1	
8G683	A.9	
8G2176	A.1	
8G2285	A.3	
8G2343	A.3	
8G8183	G.1	
8G8258	M.2	
8G8307	H.3	
8G8348	E.1	
8G8420	E.3	
8G8424	E.3	
8G8641	K.4	
8G8674	H.3	
8G8675	H.3	
8G8707	K.4	
8G228510	A.3	
8G228520	A.3	
8G228530	A.3	
8G228540	A.3	
8G234310	A.3	
8G234320	A.3	
8G234330	A.3	
8G234340	A.3	
11G10	A.8	
11G12	A.8	
11G15	A.8	
11G45	A.5	
11G62	A.5	
11G74	A.1	
11G96	A.2	
11G136	A.3	
11G145	A.6	
11G193	A.5	
11G203	A.3	
11G241	A.4	
11G3022	F.3	
11G3026	F.3	
11G3027	F.3	
11G3028	F.3	
11G3029	F.3	
11G3063	F.3	
11G3064	F.3	
11G3079	F.2	
11G3092	F.3	
11G3093	F.3	
11G3124	F.3	
11G3127	F.3	

Part Number	Page	Amdt. Number
11G3128	F.3	
11G3129	F.3	
11G3131	F.2	
11G3132	F.2	
11G3133	F.2	
11G3134	F.2	
11G3135	F.2	
11G3137	F.2	
11G3140	F.2	
11G3144	F.4	
11G3187	F.2	
11G3195	F.4	
11G3196	F.4	
11G3199	F.4	
11G3223	F.4	
11G3228	F.3	
11G3264	F.3	
12G114	A.6	
14G2444	R.1	
14G3499	R.27	
14G3722	N.9	
14G3736	R.23	
21G6050	N.8	
21G9057	N.7	
24G629	R.15	
24G1482	R.28	
48G206	F.3	
48G207	A.5	
48G263	A.5	
48G264	A.5	
48G266	F.1	
48G275	A.1	
48G276	A.1	
48G277	A.1	
48G278	A.1	
48G279	A.1	
48G280	A.1	
48G281	A.13	
48G282	A.13	
48G283	F.1	
1H353	A.1	
1H591	A.7	
1H605	A.3	
1H721	A.7	
1H723	A.5	
1H729	A.3	
1H730	A.3	
1H756	A.8	
1H765	A.4	
1H813	A.1	
1H822	A.4	
1H840	A.7	
1H841	B.1	
1H871	A.7	
1H898	A.9	
1H922	A.9	
1H1001	A.11	
1H1051	A.9	
1H1052	A.9	
1H1056	A.9	
1H1067	A.9	
1H1068	A.9	
1H1153	A.10	
1H1154	A.10	
1H1191	A.8	
1H1198	A.8	
1H1257	D.6	
1H1319	A.5	
1H1320	A.5	
1H1321	A.5	
1H1435	A.3	
1H3026	F.5	
1H3087	F.4	
1H3095	F.4	
1H3101	F.4	
1H3130	F.4	
1H3131	F.5	
1H3138	F.1	
1H3257	F.2	
1H3258	F.2	
1H3275	F.1	
1H3277	F.3	
1H3304	F.2	
1H3305	F.3	
1H3364	F.1	
1H3364	H.1	
1H3368	F.4	
1H3369	F.4	
2H326	A.3	
2H2617	N.10	
2H2704	N.10	
2H2704	N.11	
2H3406	N.10	
2H4185	N.3	
2H4243	B.2	
2H4244	B.2	
2H4245	B.2	
2H4246	B.2	
2H4905	A.4	
2H4992	N.10	
2H8445	R.23	
3H550	E.2	
3H550	E.3	
3H550	M.2	
3H554	E.3	
3H576	A.1	
3H1422	B.2	
3H2006	A.6	
3H2287	E.3	
3H2287	M.2	
3H2287	M.3	
3H2424	M.3	
3H2428	K.4	
3H2695	B.2	
3H2696	B.2	
3H2865	F.3	
7H1709	P.1	
7H1764	A.9	
7H1790	A.8	
7H1792	A.8	
7H1793	A.8	
7H1948	A.9	
7H1952	A.9	
7H1965	A.9	
7H1968	A.9	
7H1969	A.9	
7H1993	R.27	
7H3078	E.1	
7H3858	G.1	
7H3863	G.1	
7H3865	G.1	
7H3877	G.1	
7H3878	G.1	
7H3879	G.1	
7H3880	G.1	
7H5000	N.2	
7H5001	N.2	
7H5002	N.2	
7H5004	N.2	
7H5005	N.2	
7H5010	N.2	
7H5011	N.2	
7H5013	N.2	
7H5067	N.3	
7H5130	N.9	
7H5156	N.2	
7H5339	N.2	
7H5390	N.1	
7H5498	N.2	
7H5536	N.6	
7H5582	N.4	
7H5582	N.5	
7H5582	N.7	
7H6902	N.8	
7H6903	N.8	
7H6904	N.8	
7H6928	R.27	
7H6938	N.2	
7H6939	N.2	
7H6940	N.2	
7H6941	N.2	
7H6942	N.2	
7H6969	J.2	
7H6970	J.2	
7H6971	J.2	
7H6972	J.2	
7H7003	E.3	
7H7004	E.3	
7H7398	H.3	
7H7504	H.3	
7H7553	E.1	
7H7560	E.3	
7H7851	M.2	
7H7857	E.2	
7H7954	E.3	
7H7956	E.3	
7H7957	E.3	
7H7958	E.3	
7H7959	E.3	
7H7983	E.3	
7H8319	N.2	
7H8335	N.4	
7H8338	N.4	
7H8338	N.5	
7H8352	O.1	
7H8353	O.1	
7H9864	R.14	
7H9866	R.14	
7H9867	R.14	
7H9868	R.14	
7H9878	R.10	
12H37	A.6	
12H67	A.10	
12H71	A.10	
12H74	A.8	
12H90	B.1	
12H152	A.7	
12H156	A.7	
12H184	A.8	
12H389	A.5	
12H390	A.5	
12H395	A.8	
12H397	A.8	
12H398	A.8	
12H424	A.3	
12H426	A.3	
12H434	A.5	
12H435	A.5	
12H436	A.5	
12H579	E.1	
12H596	A.6	
12H708	A.14	
12H709	A.14	
12H712	D.6	
12H713	A.4	
12H715	A.17	
12H719	D.6	
12H722	D.1	

Part Number	Page	Amdt. Number
12H723	D.1	
12H725	D.2	
12H727	D.2	
12H733	B.1	
12H751	A.6	
12H752	A.7	
12H753	A.3	
12H755	A.2	
12H757	A.2	
12H758	A.2	
12H759	A.2	
12H760	A.2	
12H762	A.7	
12H765	A.2	
12H768	A.7	
12H769	A.2	
12H770	A.7	
12H771	A.7	
12H773	A.4	
12H775	A.3	
12H792	B.1	
12H797	A.6	
12H799	A.10	
12H802	D.2	
12H813	A.8	
12H814	A.10	
12H836	A.11	
12H888	A.11	
12H075510	A.2	
12H075520	A.2	
12H075530	A.2	
12H075540	A.2	
12H075710	A.2	
12H075720	A.2	
12H075730	A.2	
12H075740	A.2	
12H075810	A.2	
12H075820	A.2	
12H075830	A.2	
12H075840	A.2	
12H075910	A.2	
12H075920	A.2	
12H075930	A.2	
12H075940	A.2	
12H076010	A.2	
12H076020	A.2	
12H076030	A.2	
12H076040	A.2	
13H59	R.27	
13H106	K.3	
13H110	N.8	
13H176	N.3	
13H219	N.1	
13H226	N.3	
13H252	N.3	
13H337	N.3	
13H425	N.1	
13H469	N.9	
13H472	N.8	
13H473	N.8	
13H484	E.1	
13H496	N.4	
13H565	N.4	
13H568	J.2	
13H569	J.2	
13H590	A.6	
13H591	A.10	
13H628	N.2	
17H31	A.4	
17H341	A.13	
17H343	A.4	
17H846	A.9	
17H932	O.2	
17H961	O.1	
17H962	O.1	
17H1304	O.1	
17H1446	A.9	
17H1447	A.9	
17H1448	A.9	
17H1449	A.9	
17H1556	A.9	
17H1558	A.9	
17H1559	A.9	
17H1595	R.27	
17H1601	R.28	
17H1603	R.28	
17H1642	O.2	
17H1658	O.1	
17H1712	A.8	
17H1801	R.27	
17H2013	N.9	
17H2077	P.1	
17H2078	P.1	
17H2088	N.4	
17H2132	N.11	
17H2284	R.27	
17H2285	R.27	
17H2286	R.27	
17H2287	R.27	
17H2288	R.27	
17H3308	N.6	
17H3310	N.6	
17H3319	N.6	
17H3500	J.1	
17H3501	J.1	
17H3502	J.1	
17H3503	J.1	
17H3513	J.1	
17H3818	G.1	
17H3819	G.1	
17H3873	J.2	
17H3874	J.2	
17H3875	J.2	
17H3925	J.2	
17H3955	G.1	
17H5145	N.4	
17H5205	N.4	
17H5205	N.5	
17H5216	N.7	
17H5217	N.1	
17H5231	N.4	
17H5231	N.5	
17H5301	N.7	
17H5301	R.18	
17H5302	N.7	
17H5302	R.18	
17H5306	N.4	
17H5375	N.4	
17H5390	N.9	
17H5394	N.4	
17H5394	N.5	
17H5396	N.9	
17H5425	N.7	
17H5431	N.9	
17H5441	N.9	
17H6290	J.1	
17H6560	J.1	
17H6561	J.1	
17H6562	J.1	
17H6563	J.1	
17H6564	J.1	
17H6565	J.2	
17H6566	J.1	
17H6567	J.1	
17H6568	J.1	
17H6569	J.1	
17H6570	J.1	
17H6571	J.1	
17H6572	J.1	
17H6573	J.1	
17H6574	J.1	
17H6575	J.1	
17H6577	J.2	
17H6578	J.2	
17H6579	J.1	
17H6580	J.1	
17H6582	J.1	
17H6583	J.1	
17H6584	J.1	
17H6588	J.1	
17H6589	J.1	
17H7108	M.3	
17H7122	E.2	
17H7122	M.2	
17H7123	E.2	
17H7123	M.2	
17H7141	M.3	
17H7407	E.2	
17H7407	M.2	
17H7408	E.2	
17H7408	M.2	
17H7411	E.2	
17H7411	M.2	
17H7511	H.3	
17H7554	E.2	
17H7554	M.2	
17H7560	E.2	
17H7560	M.2	
17H7623	H.3	
17H7629	M.2	
17H7729	K.4	
17H7836	E.2	
17H7860	E.2	
17H7860	M.2	
17H7878	E.3	
17H7917	K.4	
17H7926	K.4	
17H7933	J.1	
17H7949	H.3	
17H7969	H.3	
17H7971	H.3	
17H7972	H.3	
17H7973	H.3	
17H7974	H.3	
17H7981	E.2	
17H7981	M.2	
17H7984	E.2	
17H7984	M.2	
17H7985	E.2	
17H7985	M.2	
17H7986	H.3	
17H7987	K.4	
17H7988	K.4	
17H7989	K.4	
17H7990	K.4	
17H7991	H.3	
17H7992	H.3	
17H7993	H.3	
17H7994	H.3	
17H7995	H.3	
17H7996	H.3	
17H7997	H.3	
17H7998	H.3	
22H15	F.5	
22H24	F.4	
22H25	F.4	
22H29	F.3	
22H35	F.3	
22H54	F.3	
22H56	F.1	
22H83	F.3	
22H150	F.1	
22H152	F.4	
22H211	F.1	

Part Number	Page	Amdt. Number
27H387	O.2	
27H602	R.27	
27H972	O.2	
27H1187	R.28	
27H1193	R.27	
27H1198	R.28	
27H1249	R.28	
27H1874	R.27	
27H3280	E.1	
27H3281	E.1	
27H3282	E.1	
27H3283	E.1	
27H3284	E.1	
27H3285	E.1	
27H3286	E.1	
27H5253	N.4	
27H5253	N.5	
27H5374	N.9	
27H5401	N.8	
37H99	R.27	
37H537	R.27	
37H640	O.1	
37H996	A.9	
37H1204	O.1	
37H1205	O.1	
37H1242	D.1	
37H5169	N.9	
37H5181	N.10	
37H5181	N.11	
37H5192	N.4	
37H5192	N.5	
37H5271	N.4	
37H5271	N.5	
37H5294	N.6	
37H5426	N.7	
37H5426	R.18	
37H5452	N.6	
37H5452	N.7	
37H5459	N.7	
37H5525	N.7	
37H5579	N.8	
37H5581	N.8	
37H9781	R.15	
37H9955	R.22	
37H9956	R.22	
37H9957	R.22	
47H5124	N.5	
47H5125	N.5	
47H5126	N.4	
47H5126	N.5	
47H5166	N.10	
47H5212	N.3	
47H5388	N.1	
47H5389	N.1	
47H5390	N.1	
47H5391	N.1	
47H5393	N.1	
47H5394	N.1	
47H5395	N.1	
47H5408	N.8	
47H5417	N.10	
47H5417	N.11	
47H5418	N.10	
47H5419	N.10	
47H5469	N.8	
47H5496	N.10	
47H5496	N.11	
47H5528	N.5	
57H5084	N.1	
57H5085	N.1	
57H5292	N.4	
57H5296	N.4	
57H5296	N.5	
57H5309	N.8	
57H5310	N.8	
57H5311	N.9	
57H5312	N.9	
57H5354	N.7	
57H5355	N.7	
57H5356	N.7	
57H5357	N.7	
57H5358	N.7	
57H5359	N.7	
57H5395	N.3	
57H5396	N.3	
57H5398	N.3	
57H5465	N.6	
57H5558	N.9	
57H5559	N.9	
57H5568	N.6	
57H5569	N.6	
57H5571	N.6	
57H5572	N.6	
57H5579	N.7	
57H5594	N.8	
57H5595	N.8	
67H5021	N.8	
67H5025	N.4	
67H5026	N.4	
67H5035	N.5	
97H626	N.1	
97H2031	L.1	
97H2797	J.2	
HBN0412	A.4	
HBZ0408	M.3	
HBZ0418	D.1	
HBZ0422	A.16	
HBZ0510	F.5	
HBZ0511	A.17	
HBZ0512	K.2	
HBZ0513	A.7	
HBZ0513	A.10	
HBZ0513	J.2	
HBZ0514	A.10	
HBZ0514	H.4	
HBZ0515	F.5	
HBZ1516	J.2	
HBZ0518	J.2	
HBZ0520	F.5	
HBZ0522	A.16	
HBZ0612	R.15	
HBZ0616	R.15	
HBZ0632	M.1	
HBZ0724	H.4	
HBZ0726	L.1	
HBZ0728	R.15	
HBZ0730	R.16	
HCS0709	R.28	
HCS1217	C.1	
HCZ0510	F.1	
HCZ0510	J.1	
HCZ0615	E.3	
HNS0406	A.3	
HNS0407	A.8	
HNS0407	F.2	
HNS0408	A.8	
HNS0414	A.8	
HPS0406	R.10	
HPZ0710	R.15	
HZA126	N.9	
HZA132	R.2	
HZA133	R.2	
HZA138	R.3	
HZA139	R.3	
HZA160	R.3	
HZA161	R.3	
HZA171	R.3	
HZA188	R.3	
HZA189	R.3	
HZA230	R.19	
HZA236	R.3	
HZA237	R.3	
HZA266	F.5	
HZA318	R.2	
HZA319	R.1	
HZA332	R.1	
HZA350	R.2	
HZA356	R.2	
HZA360	R.9	
HZA361	R.9	
HZA364	R.1	
HZA366	R.2	
HZA367	R.2	
HZA368	R.2	
HZA368	R.7	
HZA383	R.7	
HZA388	R.3	
HZA401	R.1	
HZA403	R.3	
HZA404	R.3	
HZA407	R.2	
HZA408	R.2	
HZA409	R.1	
HZA410	R.1	
HZA411	R.2	
HZA412	R.2	
HZA419	R.2	
HZA420	R.3	
HZA421	R.3	
HZA433	R.28	
HZA442	R.3	
HZA443	R.3	
HZA452	R.17	
HZA453	R.17	
HZA454	R.17	
HZA455	R.17	
HZA457	C.1	
HZA461	R.3	
HZA465	R.3	
HZA480	R.2	
HZA482	R.3	
HZA483	R.3	
HZA489	C.2	
HZA490	C.2	
HZA491	C.2	
HZA496	R.3	
HZA497	R.3	
HZA542	R.17	
HZA543	R.17	
HZA544	R.17	
HZA545	R.17	
HZA546	R.27	
HZA547	R.27	
HZA548	R.2	
HZS0403	A.7	
HZS0403	M.1	
HZS0404	A.6	
HZS0404	A.16	
HZS0404	C.2	
HZS0404	F.5	
HZS0404	M.5	
HZS0404	N.11	

Part Number	Page	Amdt. Number
HZS0404	R.1	
HZS0404	R.2	
HZS0404	R.7	
HZS0404	R.9	
HZS0404	R.17	
HZS0405	A.12	
HZS0405	A.15	
HZS0405	A.17	
HZS0405	B.2	
HZS0405	D.2	
HZS0405	F.1	
HZS0405	K.1	
HZS0405	M.1	
HZS0405	M.4	
HZS0405	N.9	
HZS0405	R.1	
HZS0405	R.2	
HZS0405	R.5	
HZS0405	R.28	
HZS0406	A.7	
HZS0406	A.11	
HZS0406	F.3	
HZS0406	R.1	
HZS0406	R.2	
HZS0406	R.17	
HZS0406	R.26	
HZS0408	A.17	
HZS0408	O.2	
HZS0410	M.3	
HZS0504	D.2	
HZS0504	K.4	
HZS0505	A.14	
HZS0505	C.1	
HZS0505	K.5	
HZS0505	M.1	
HZS0505	M.3	
HZS0505	R.1	
HZS0506	A.2	
HZS0506	A.7	
HZS0506	A.10	
HZS0506	A.15	
HZS0506	A.16	
HZS0506	K.2	
HZS0506	R.17	
HZS0506	R.29	
HZS0507	E.1	
HZS0507	E.2	
HZS0507	K.1	
HZS0507	M.2	
HZS0508	A.2	
HZS0508	A.15	
HZS0508	A.16	
HZS0508	E.2	
HZS0508	K.1	
HZS0508	M.2	
HZS0508	R.1	
HZS0509	A.10	
HZS0510	A.10	
HZS0510	C.1	
HZS0603	F.4	
HZS0606	A.15	
HZS0607	A.15	
HZS0608	A.7	
HZS0610	R.15	
HZS1005	A.14	
1K372	A.5	
1K800	A.5	
1K2141	A.9	
1K2142	A.9	
2K1203	E.3	
2K1356	F.1	
2K1369	O.1	
2K4608	A.5	
2K4936	O.2	
2K4954	A.1	
2K4958	A.7	
2K4958	F.1	
2K4974	A.10	
2K4975	A.1	
2K4982	A.8	
2K4993	A.1	
2K5163	A.9	
2K5164	A.9	
2K5197	A.7	
2K5211	A.6	
2K5319	A.2	
2K5319	A.3	
2K5319	A.6	
2K5319	A.8	
2K5319	A.10	
2K5319	E.1	
2K5319	F.4	
2K5622	E.3	
2K5830	F.1	
2K6124	A.1	
2K6544	H.1	
2K6633	A.3	
2K6805	A.5	
2K6842	R.15	
2K7435	H.1	
2K7440	A.7	
2K7477	H.2	
2K7993	H.1	
2K8158	F.1	
2K8159	A.14	
2K8160	H.2	
2K8169	A.1	
2K8568	A.6	
2K8645	N.1	
2K8686	E.2	
2K8938	H.1	
2K8951	K.2	
2K8960	F.3	
6K26	A.4	
6K287	H.2	
6K449	H.1	
6K501	A.9	
6K503	H.1	
6K528	F.2	
6K529	F.1	
6K629	A.3	
6K638	A.1	
6K638	A.8	
6K639	A.8	
6K649	B.1	
6K650	B.1	
6K842	H.2	
6K871	A.5	
6K872	A.5	
6K873	A.5	
6K874	A.1	
6K875	H.1	
6K878	A.5	
6K881	A.3	
6K884	F.3	
6K884	F.4	
6K885	F.1	
6K886	F.1	
6K892	F.2	
6K899	A.1	
6K907	F.2	
6K908	F.2	
6K9012	F.1	
6K9062	R.20	
6K9062	R.21	
31K5558	J.1	
51K245	A.1	
51K246	A.1	
51K267	A.1	
51K330	K.3	
51K371	A.6	
51K881	A.5	
51K886	H.1	
51K895	A.5	
51K1022	A.4	
51K1030	F.4	
51K1031	F.4	
51K1178	A.5	
51K1380	H.3	
51K1388	A.3	
51K1476	A.1	
51K1774	A.3	
51K2824	O.2	
53K143	F.5	
53K147	F.1	
53K149	N.2	
53K162	F.1	
53K257	A.1	
53K490	A.5	
53K531	A.5	
53K1016	R.28	
53K1025	K.1	
53K1206	A.10	
53K1420	M.4	
53K1433	A.10	
53K1778	A.7	
53K1779	A.7	
53K2171	A.1	
53K2172	F.1	
53K2613	N.8	
54K312	F.4	
5L64	N.10	
5L64	N.11	
LFP116	R.14	
LFP1006	R.14	
LFP1500	R.23	
LFS100	R.12	
LFS100	R.13	
LFS100	R.14	
LFS100	R.23	
LFS107	R.12	
LFS107	R.13	
LFS107	R.14	
LFS107	R.23	
LNN208	A.1	
LNZ104	D.1	
LNZ105	A.15	
LNZ105	G.1	
LNZ105	M.4	
LNZ106	K.2	
LNZ106	M.4	
LNZ107	K.5	
LNZ108	K.1	
LNZ205	A.10	
LNZ205	J.1	
LNZ206	A.10	
LNZ206	F.4	
LWN204	A.7	
LWN204	A.8	
LWN205	A.7	
LWN304	A.6	
LWN304	A.8	
LWN304	A.11	
LWN304	F.2	
LWN306	A.10	

Part Number	Page	Amdt. Number
LWN306	N.2	
LWN307	H.1	
LWN404	A.3	
LWN404	F.2	
LWN404	F.4	
LWZ202	R.7	
LWZ202	R.18	
LWZ203	A.12	
LWZ203	A.17	
LWZ203	C.2	
LWZ203	K.5	
LWZ203	M.1	
LWZ203	M.3	
LWZ203	M.5	
LWZ203	N.3	
LWZ203	N.4	
LWZ203	N.10	
LWZ203	R.1	
LWZ203	R.4	
LWZ203	R.5	
LWZ203	R.6	
LWZ203	R.7	
LWZ203	R.8	
LWZ203	R.9	
LWZ203	R.10	
LWZ203	R.12	
LWZ203	R.13	
LWZ203	R.14	
LWZ203	R.17	
LWZ203	R.18	
LWZ203	R.19	
LWZ203	R.22	
LWZ203	R.27	
LWZ203	R.30	
LWZ204	A.12	
LWZ204	A.15	
LWZ204	A.16	
LWZ204	A.17	
LWZ204	B.2	
LWZ204	C.2	
LWZ204	D.1	
LWZ204	D.2	
LWZ204	F.5	
LWZ204	F.11	
LWZ204	H.3	
LWZ204	K.1	
LWZ204	M.1	
LWZ204	M.3	
LWZ204	M.4	
LWZ204	M.5	
LWZ204	N.3	
LWZ204	N.8	
LWZ204	N.9	
LWZ204	N.11	
LWZ204	O.2	
LWZ204	R.1	
LWZ204	R.2	
LWZ204	R.5	
LWZ204	R.7	
LWZ204	R.9	
LWZ204	R.10	
LWZ204	R.12	
LWZ204	R.16	
LWZ204	R.17	
LWZ204	R.26	
LWZ204	R.27	
LWZ204	R.28	
LWZ204	R.29	
LWZ205	A.7	
LWZ205	A.14	
LWZ205	A.15	
LWZ205	A.16	
LWZ205	A.17	
LWZ205	C.1	
LWZ205	E.2	
LWZ205	G.1	
LWZ205	H.1	
LWZ205	J.1	
LWZ205	J.2	
LWZ205	K.1	
LWZ205	K.2	
LWZ205	K.4	
LWZ205	K.5	
LWZ205	M.1	
LWZ205	M.2	
LWZ205	M.3	
LWZ205	M.4	
LWZ205	R.1	
LWZ205	R.9	
LWZ205	R.17	
LWZ205	R.29	
LWZ206	A.15	
LWZ206	E.3	
LWZ206	F.4	
LWZ206	H.3	
LWZ206	H.4	
LWZ206	K.2	
LWZ206	K.4	
LWZ206	M.1	
LWZ206	R.10	
LWZ206	R.15	
LWZ207	H.4	
LWZ207	L.1	
LWZ207	N.1	
LWZ207	R.2	
LWZ208	K.1	
LWZ208	K.5	
LWZ208	L.1	
LWZ208	R.16	
LWZ210	J.1	
LWZ212	F.2	
LWZ212	H.2	
LWZ302	B.1	
LWZ303	R.27	
LWZ304	F.1	
LWZ304	F.4	
LWZ304	R.16	
LWZ305	A.7	
LWZ305	A.15	
LWZ305	D.2	
LWZ305	F.1	
LWZ305	F.5	
LWZ306	A.7	
LWZ306	A.10	
LWZ306	A.15	
LWZ306	K.1	
LWZ307	R.15	
LWZ307	R.16	
LWZ403	R.27	
LWZ403	R.7	
LWZ403	R.27	
LWZ403	R.28	
LWZ404	F.3	
LWZ506	M.4	
LWZ510	E.2	
MB19956	R.12	
PCR0307	M.3	
PCR0311	M.3	
PCR0407	N.10	
PCR0411	E.3	
PCR0507	D.1	
PCR0507	N.10	
PCR0509	D.1	
PCR0509	N.10	
PCR0607	N.10	
PCR0611	C.1	
PCR0811	R.27	
PCR1007	N.10	
PCR1009	N.10	
PFR108	R.30	
PFS103	R.6	
PRS106	C.1	
PFS206	R.16	
PFS308	R.17	
PFS308	R.18	
PFS326	R.17	
PFS410	C.1	
PFS410	R.2	
PJZ603	R.16	
PMP0306	R.7	
PMP0412	R.12	
PMZ0204	R.18	
PMZ0206	R.18	
PMZ0208	R.7	
PMZ0216	B.1	
PMZ0304	R.12	
PMZ0305	R.17	
PMZ0306	M.5	
PMZ0306	N.3	
PMZ0306	N.10	
PMZ0306	R.4	
PMZ0306	R.7	
PMZ0306	R.12	
PMZ0307	A.17	
PMZ0308	A.12	
PMZ0308	C.2	
PMZ0308	K.5	
PMZ0308	M.1	
PMZ0308	N.10	
PMZ0308	R.1	
PMZ0308	R.6	
PMZ0308	R.7	
PMZ0308	R.12	
PMZ0308	R.13	
PMZ0308	R.17	
PMZ0308	R.30	
PMZ0310	N.3	
PMZ0310	N.4	
PMZ0310	R.27	
PMZ0312	M.1	
PMZ0314	A.12	
PMZ0408	N.8	
PMZ0408	R.9	
PMZ0410	R.5	
PMZ0410	R.16	
PMZ0410	R.27	
PMZ0412	R.16	
PPZ0316	R.10	
PPZ0410	N.3	
PTP606	R.30	
PTZ602	R.17	
PTZ602	R.19	
PTZ602	R.27	
PTZ603	R.6	
PTZ603	R.27	
PTZ603	R.28	
PTZ605	D.4	
PTZ803	R.19	
PTZ803	R.22	
PTZ805	R.19	
PTZ810	N.3	
PTZ1003	R.30	
PTZ1004	R.2	
PTZ1004	R.4	
PWN105	A.6	
PWN105	A.8	

Part Number	Page	Amdt. Number
PWN106	A.6	
PWN106	A.10	
PWP104	R.10	
PWP203	R.10	
PWZ102	B.1	
PWZ102	R.18	
PWZ103	A.17	
PWZ103	C.2	
PWZ103	N.3	
PWZ103	N.10	
PWZ103	R.6	
PWZ103	R.17	
PWZ103	R.18	
PWZ103	R.27	
PWZ104	A.12	
PWZ104	A.16	
PWZ104	C.2	
PWZ104	D.1	
PWZ104	D.2	
PWZ104	M.1	
PWZ104	M.4	
PWZ104	M.5	
PWZ104	N.3	
PWZ104	N.8	
PWZ104	R.2	
PWZ104	R.6	
PWZ104	R.7	
PWZ104	R.9	
PWZ104	R.16	
PWZ104	R.17	
PWZ104	R.27	
PWZ104	R.28	
PWZ105	A.6	
PWZ105	A.7	
PWZ105	A.14	
PWZ105	A.15	
PWZ105	A.16	
PWZ105	C.1	
PWZ105	E.2	
PWZ105	F.1	
PWZ105	J.2	
PWZ105	M.1	
PWZ105	R.4	
PWZ105	R.17	
PWZ105	R.29	
PWZ107	K.5	
PWZ107	L.1	
PWZ107	M.4	
PWZ108	K.1	
PWZ110	A.14	
PWZ202	R.18	
PWZ203	A.17	
PWZ203	R.1	
PWZ203	R.7	
PWZ203	R.10	
PWZ203	R.12	
PWZ203	R.13	
PWZ203	R.19	
PWZ203	R.22	
PWZ203	R.27	
PWZ204	A.17	
PWZ204	B.2	
PWZ204	M.4	
PWZ204	N.9	
PWZ204	R.1	
PWZ204	R.2	
PWZ204	R.5	
PWZ204	R.9	
PWZ205	A.14	
PWZ205	M.4	
PWZ205	R.1	
PWZ205	R.9	
PWZ205	R.17	
PWZ206	H.4	
PWZ206	M.1	
PWZ207	R.2	
PWZ208	R.16	
RFN104	R.28	
RFN204	R.5	
RFN204	R.29	
RFN206	R.29	
RFN210	R.30	
RFN224	R.29	
RFN303	N.10	
RFN306	N.10	
RFN503	N.10	
RFR103	A.17	
RFR207	R.29	
RFR216	R.30	
RFR503	R.28	
RJP805	R.18	
RMP0212	R.7	
RMP0214	N.8	
RMP0306	C.2	
RMP0310	R.18	
RMP0314	N.7	
RMP0316	N.7	
RMZ0308	R.7	
RMZ0308	R.8	
RTP603	R.14	
RTP604	R.14	
RTP605	R.20	
RTP605	R.21	
RTP804	R.19	
RTP1004	F.5	
RTP2804	R.17	
RTZ804	R.13	
RTZ1004	M.3	
TFP116	R.14	
TFS100	R.14	
UHN305	J.1	
UHN400	G.1	
UHN400	K.2	
UHN445	K.3	
WKN304	A.3	
WKN304	F.4	
WKN404	F.4	
WKN404	N.1	
WKN505	A.3	
ZCS0505	A.10	
ZCS0505	A.15	
ZCS0507	J.1	
ZCS0610	R.10	
2715	D.2	
2718	D.2	
45223	B.2	
83875	O.2	
84138	O.2	
126900	K.1	
126902	K.1	
126903	K.1	
126908	K.1	
126914	K.2	
126915	K.2	
127464	D.2	
127657	K.1	
128978	R.6	
130154	E.2	
130154	M.1	
185393	G.1	
185794	E.2	
185794	M.1	
185795	E.2	
185795	M.1	
185925	N.9	
300398	R.27	
500823	K.2	

Part Number	Page	Amdt. Number
PWZ105	A.16	
PWZ105	C.1	
PWZ105	E.2	
PWZ105	F.1	
PWZ105	F.6	
PWZ105	J.2	
PWZ105	M.1	
PWZ105	R.4	
PWZ105	R.17	
PWZ105	R.29	
PWZ107	K.5	
PWZ107	L.1	
PWZ107	M.4	
PWZ108	K.1	
PWZ110	A.14	
PWZ202	R.18	
PWZ203	A.17	
PWZ203	N.3	
PWZ203	R.1	
PWZ203	R.7	
PWZ203	R.10	
PWZ203	R.12	
PWZ203	R.13	
PWZ203	R.19	
PWZ203	R.22	
PWZ203	R.27	
PWZ204	A.17	
PWZ204	B.2	
PWZ204	M.4	
PWZ204	N.9	
PWZ204	R.1	
PWZ204	R.2	
PWZ204	R.5	
PWZ204	R.9	
PWZ205	A.14	
PWZ205	M.4	
PWZ205	R.1	
PWZ205	R.9	
PWZ205	R.17	
PWZ206	H.4	
PWZ206	M.1	
PWZ207	R.2	
PWZ208	R.16	
RFN104	R.28	
RFN204	R.5	
RFN204	R.29	
RFN206	R.29	
RFN210	R.30	
RFN224	R.29	
RFN303	N.10	
RFN306	N.10	
RFN503	N.10	
RFR103	A.17	
RFR207	R.29	
RFR216	R.30	
RFR503	R.28	
RJP805	R.18	
RMP0212	R.7	
RMP0214	N.8	
RMP0306	C.2	
RMP0310	R.18	
RMP0314	N.7	
RMP0316	N.7	
RMZ0308	R.7	
RMZ0308	R.8	
RTP603	R.14	
RTP604	R.14	
RTP605	R.20	
RTP605	R.21	
RTP804	R.19	
RTP1004	F.5	
RTP1004	F.11	
RTP2804	R.17	
RTZ804	R.13	
RTZ1004	M.3	
TFP116	R.14	
TFS100	R.14	
UHN305	J.1	
UHN400	G.1	
UHN400	K.2	
UHN445	K.3	
WKN304	A.3	
WKN304	F.4	
WKN404	F.4	
WKN404	F.8	
WKN404	N.1	
WKN505	A.3	
ZCS0505	A.10	
ZCS0505	A.15	
ZCS0507	J.1	
ZCS0508	F.9	
ZCS0520	F.9	
ZCS0610	R.10	
2715	D.2	
2718	D.2	
45223	B.2	
83875	O.2	
84138	O.2	
126900	K.1	
126902	K.1	
126903	K.1	
126908	K.1	
126914	K.2	
126915	K.2	
127464	D.2	
127657	K.1	
128978	R.6	
130154	E.2	
130154	M.1	
185393	G.1	
185794	E.2	
185794	M.1	
185795	E.2	
185795	M.1	
185925	N.9	
300398	R.27	
500823	K.2	

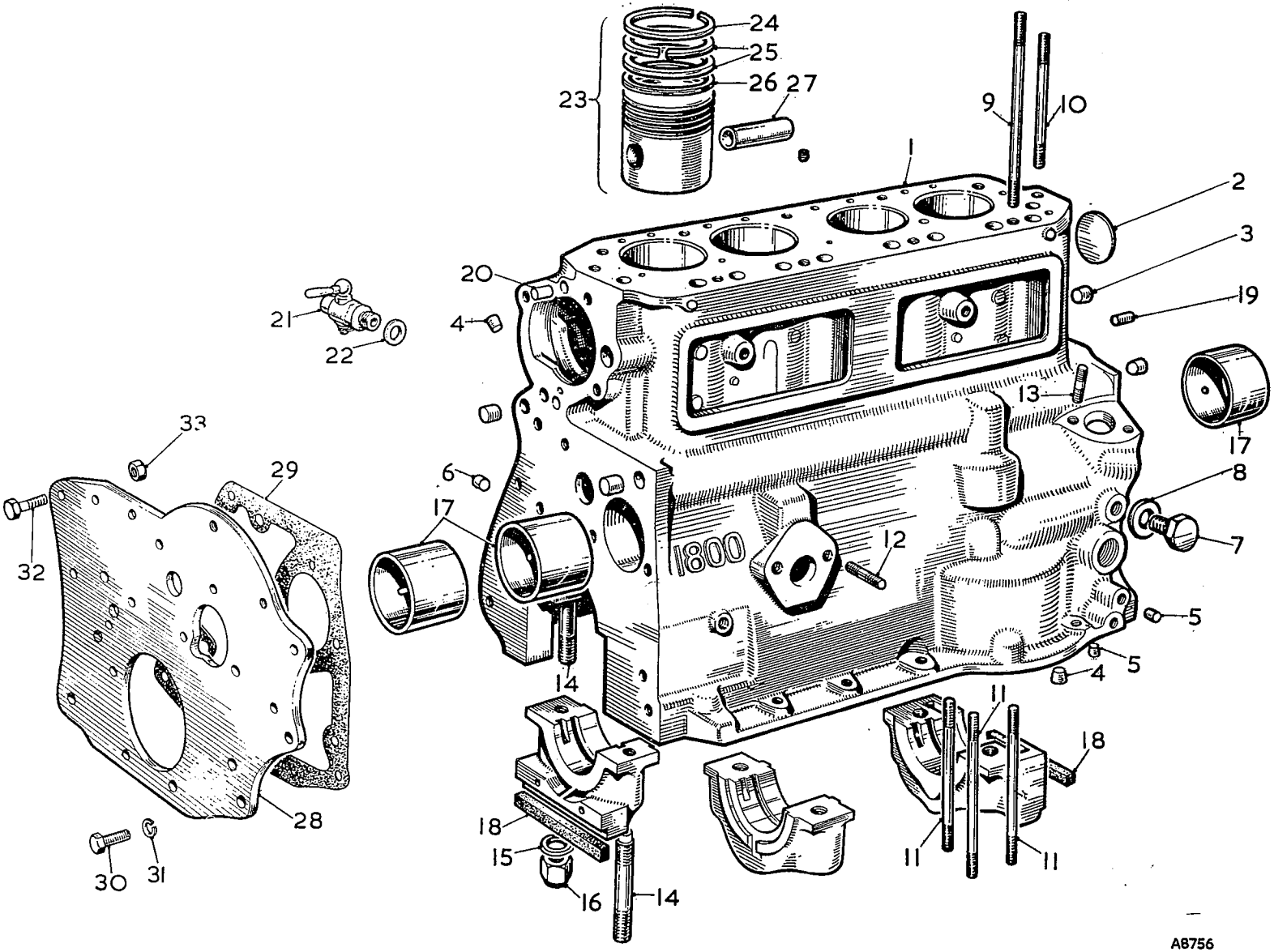
24
25
26 27
23
9
10
1
2
3
19
20
21
22
4
13
17
33
29
6
8
17
7
32
12
1800
5
5
4
14
11
18
28
18
15
16
14
11
11
30
31
A8756

ENGINE

ENGINE UNIT

Item No.	DESCRIPTION	Commencing (E) 18G/101 Part Number	Illus. No.	Qty. per Veh.	MODIFICATIONS New Part Number	MODIFICATIONS Change Point	REMARKS
1	**Stripped engine unit** ..... **HC**	**48G279**		1			
2	**Stripped engine unit** ..... **LC**	**48G280**		1			
3	**Short block assembly** ..... **HC**	**48G277**		1			
4	**Short block assembly** ..... **LC**	**48G278**		1			
5	**Cylinder block assembly** ..... **HC**	**48G275**	1	1			
6	**Cylinder block assembly** ..... **LC**	**48G276**		1			
7	Plug—welch—large	2K8169	2	4			
8	Plug—crankcase oil gallery	1H813	3	4			
9	Plug—taper—crankcase oil hole.....	6K874	4	2			
10	Plug—oil relief valve vent hole	6K899	5	2			
11	Plug—chain tensioner oil feed	11G14	6	1			
12	Plug—oil hole—screwed	2K4993	7	1			
13	Washer—screwed plug	6K638	8	1			
14	Stud—cylinder head—long	51K245	9	4			
15	Stud—cylinder head—short	51K246	10	7			
16	Stud—oil pump—short	51K267	11	3			
17	Stud—crankcase vent pipe clip	53K257	12	2			
18	Stud—tachometer spindle housing.....	53K2171	13	2			
19	Stud—main bearing cap	51K1476	14	6			
20	Cap—main bearing—front	NSP		1			
21	Cap—main bearing—centre	NSP		1			
22	Cap—main bearing—rear	NSP		1			
23	Washer—plain—main bearing stud	12B207	15	6			
24	Nut—main bearing stud	LNN208	16	6			
25	Liner—camshaft bearing	8G2176	17	set			
26	Joint—front and rear main bearing cap	1H353	18	2			
27	Dowel—gearbox mounting plate	1G752	19	2			
28	Dowel—water pump.....	2K6124	20	2			
29	Tap—drain—cylinder block	3H576	21	1			
30	Washer—drain tap	2K4954	22	1			] Alternatives
31	Washer—drain tap	2K4975		1			

Item No.	DESCRIPTION	Commencing (E) 18G/101 Part Number	Illus. No.	Qty. per Veh.	MODIFICATIONS New Part Number	MODIFICATIONS Change Point	REMARKS
	Engine Unit—*continued*						
1	**Piston assembly—standard** **HC**	**12H755**	23	4			
2	Piston assembly (·010″ [·254 mm.] O/S)	12H075510		4			
3	Piston assembly (·020″ [·508 mm.] O/S)	12H075520		4			
4	Piston assembly (·030″ [·762 mm.] O/S)	12H075530		4			
5	Piston assembly (·040″ [1·016 mm.] O/S)	12H075540		4			
6	**Piston assembly—standard** **LC**	**12H760**		4			
7	Piston assembly (·010″ [·254 mm.] O/S)	12H076010		4			
8	Piston assembly (·020″ [·508 mm.] O/S)	12H076020		4			
9	Piston assembly (·030″ [·762 mm.] O/S)	12H076030		4			
10	Piston assembly (·040″ [1·016 mm.] O/S)	12H076040		4			
11	Ring—compression—top—standard	12H757	24	4			
12	Ring—compression—top (·010″ [·254 mm.] O/S)	12H075710		4			
13	Ring—compression—top (·020″ [·508 mm.] O/S)	12H075720		4			
14	Ring—compression—top (·030″ [·762 mm.] O/S)	12H075730		4			
15	Ring—compression—top (·040″ [1·016 mm.] O/S)	12H075740		4			
16	Ring—compression—2nd and 3rd—standard	12H758	25	8			
17	Ring—compression—2nd and 3rd (·010″ [·254 mm.] O/S)	12H075810		8			
18	Ring—compression—2nd and 3rd (·020″ [·508 mm.] O/S)	12H075820		8			
19	Ring—compression—2nd and 3rd (·030″ [·762 mm.] O/S)	12H075830		8			
20	Ring—compression—2nd and 3rd (·040″ [1·016 mm.] O/S)	12H075840		8			
21	Ring—scraper—standard	12H759	26	4			
22	Ring—scraper (·010″ [·254 mm.] O/S)	12H075910		4			
23	Ring—scraper (·020″ [·508 mm.] O/S)	12H075920		4			
24	Ring—scraper (·030″ [·762 mm.] O/S)	12H075930		4			
25	Ring—scraper (·040″ [1·016 mm.] O/S)	12H075940		4			
26	Pin—gudgeon	12H765	27	4			
	ENGINE MOUNTING PLATE						
27	Plate—engine mounting	11G96	28	1			
28	Joint washer—mounting plate	12H769	29	1			
29	Screw—mounting plate to crankcase	HZS0506	30	3			
30	Washer—spring—screw	2K5319	31	3			
31	Bolt—engine mounting bracket to front plate R.H. top	HZS0508	32	1			
32	Nut—bolt	FNZ105	33	1			

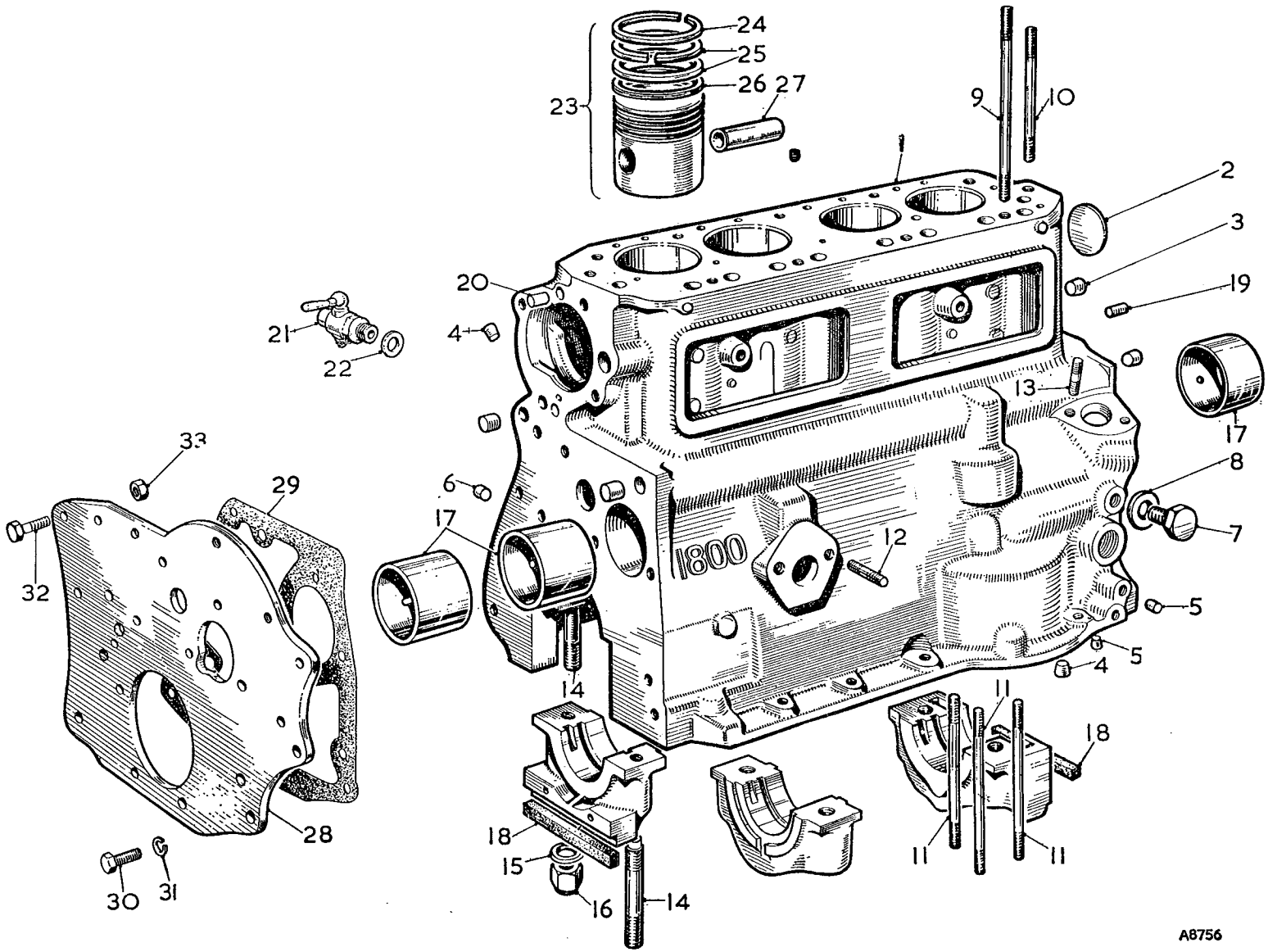

To face page A.2

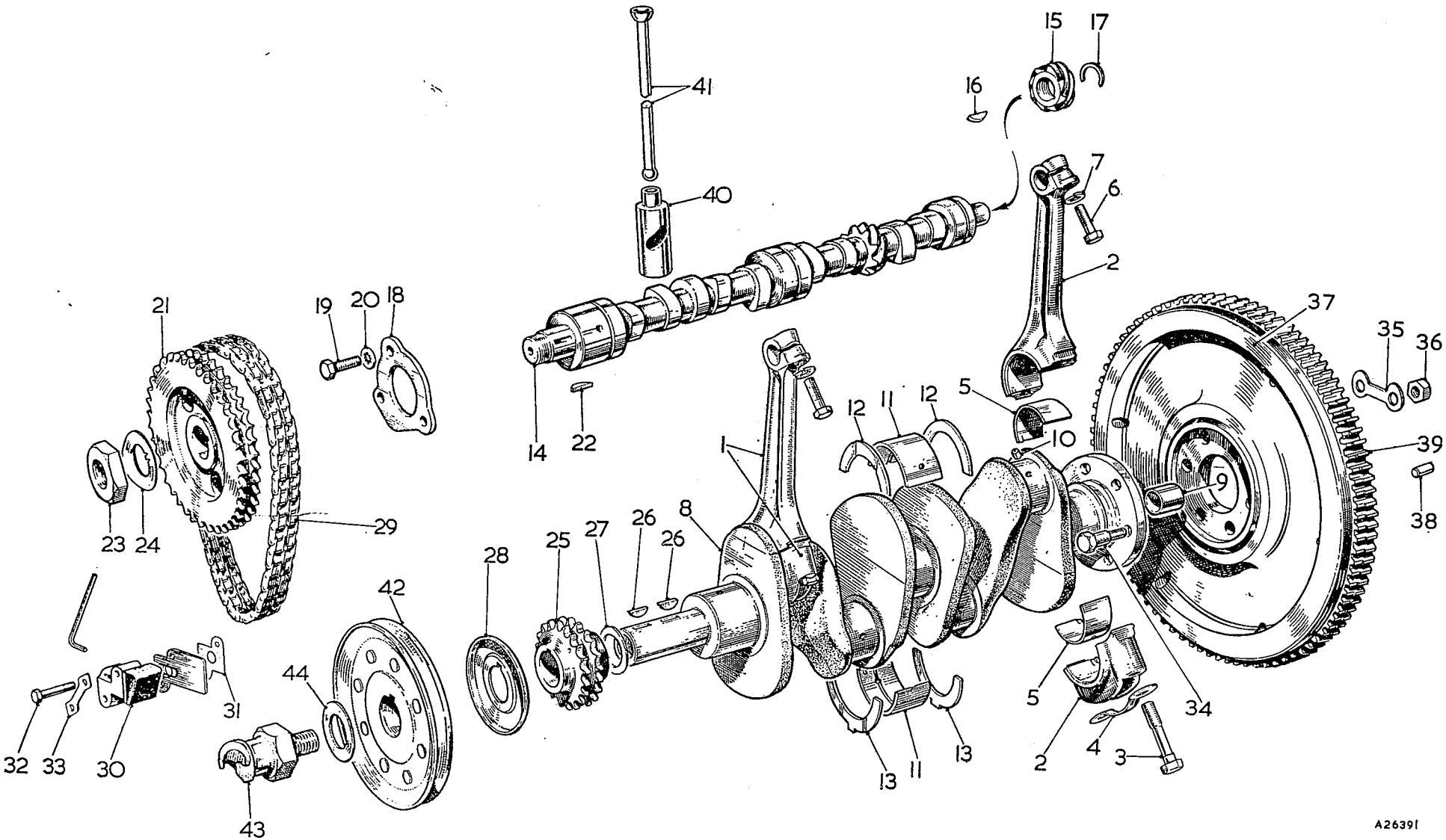

To face page A.3

Item No.	DESCRIPTION	Commencing (E) 18G/101 Part Number	Illus. No.	Qty. per Veh.	MODIFICATIONS New Part Number	MODIFICATIONS Change Point	REMARKS
	CONNECTING ROD AND BEARINGS						
1	**Connecting rod and cap Nos. 1 and 3 cylinders**	**12H426**	1	2	12H427		
2	**Connecting rod and cap Nos. 2 and 4 cylinders**	**12H424**	2	2	12H423		
3	Screw—cap	51K1388	3	8			
4	Washer—lock—screw	6K881	4	4			
5	Bearing—connecting rod—standard	8G2285	5	set			
6	Bearing—connecting rod (·010″ [·254 mm.] U/S)	8G228510		set			
7	Bearing—connecting rod (·020″ [·508 mm.] U/S)	8G228520		set			
8	Bearing—connecting rod (·030″ [·762 mm.] U/S)	8G228530		set			
9	Bearing—connecting rod (·040″ [1·016 mm.] U/S)	8G228540		set			
10	Screw—connecting rod clamping	51K1774	6	4			
11	Washer—spring—screw	2K5319	7	4			
	CRANKSHAFT AND CAMSHAFT						
12	**Crankshaft**	**12H753**	8	1			
13	Bush—1st motion shaft	1G765	9	1			
14	Plug	1G1167	10	4			
15	Bearing—main—standard	8G2343	11	set			
16	Bearing—main (·010″ [·254 mm.] U/S)	8G234310		set			
17	Bearing—main (·020″ [·508 mm.] U/S)	8G234320		set			
18	Bearing—main (·030″ [·762 mm.] U/S)	8G234330		set			
19	Bearing—main (·040″ [1·016 mm.] U/S)	8G234340		set			
20	Washer—thrust—upper	12B120	12	2			
21	Washer—thrust—upper (·003″ [·076 mm.] O/S)	12B012003		2			
22	Washer—thrust—lower	12B121	13	2			
23	Washer—thrust—lower (·003″ [·076 mm.] O/S)	12B012100		2			
24	Camshaft	1H729	14	1			] Alternatives
25	Camshaft	1H1435		1			
26	Gear—tachometer driving	1H730	15	1			
27	Key—tachometer gear	WKN304	16	1			
28	Ring—spring—tachometer gear	1H605	17	1			
29	Plate—camshaft locating	11G136	18	1			
30	Screw—locating plate to crankcase	HNS0406	19	3			
31	Washer—lock—screw	LWN404	20	3			
32	Gear—camshaft	11G203	21	1			
33	Key—camshaft gear	WKN505	22	1			
34	Nut—camshaft gear	6K629	23	1			
35	Washer—lock—nut	2A759	24	1			
36	Gear—crankshaft	1A2028	25	1			
39	Key—crankshaft gear and pulley	2H326	26	2			
38	Washer—packing—crankshaft gear	2K6633	27	A/R			
39	Thrower—oil—front—crankshaft	12H775	28	1			

Item No.	DESCRIPTION	Commencing (E) 18G/101 Part Number	Illus. No.	Qty. per Veh.	MODIFICATIONS New Part Number	MODIFICATIONS Change Point	REMARKS
	Crankshaft and Camshaft—*continued*						
1	**Chain—timing**	**2H4905**	29	1			
2	Tensioner—chain	17H343	30	1			
3	Slipper head assembly	17H31		1			
4	Joint washer—tensioner	AEC339	31	1			
5	Screw—tensioner to crankcase	HBN0412	32	2			
6	Washer—lock—screw	AEC340	33	1			
7	Bolt—flywheel to crankshaft	51K1022	34	6			
8	Washer—lock—bolt	6K26	35	3			
9	Nut—bolt	FNZ506	36	6			
	FLYWHEEL						
10	**Flywheel**	**12H713**	37	1			
11	Dowel—clutch to flywheel	1G2984	38	2			
12	Ring gear—starting		39	1			
	TAPPET AND PUSH-ROD						
13	**Tappet**	**1H822**	40	8			
14	Push-rod	11G241	41	8			
	CRANKSHAFT PULLEY						
15	Pulley—crankshaft	12H773	42	1			
16	Nut—starting	1H765	43	1			
17	Washer—lock—starting nut	1G1319	44	1			

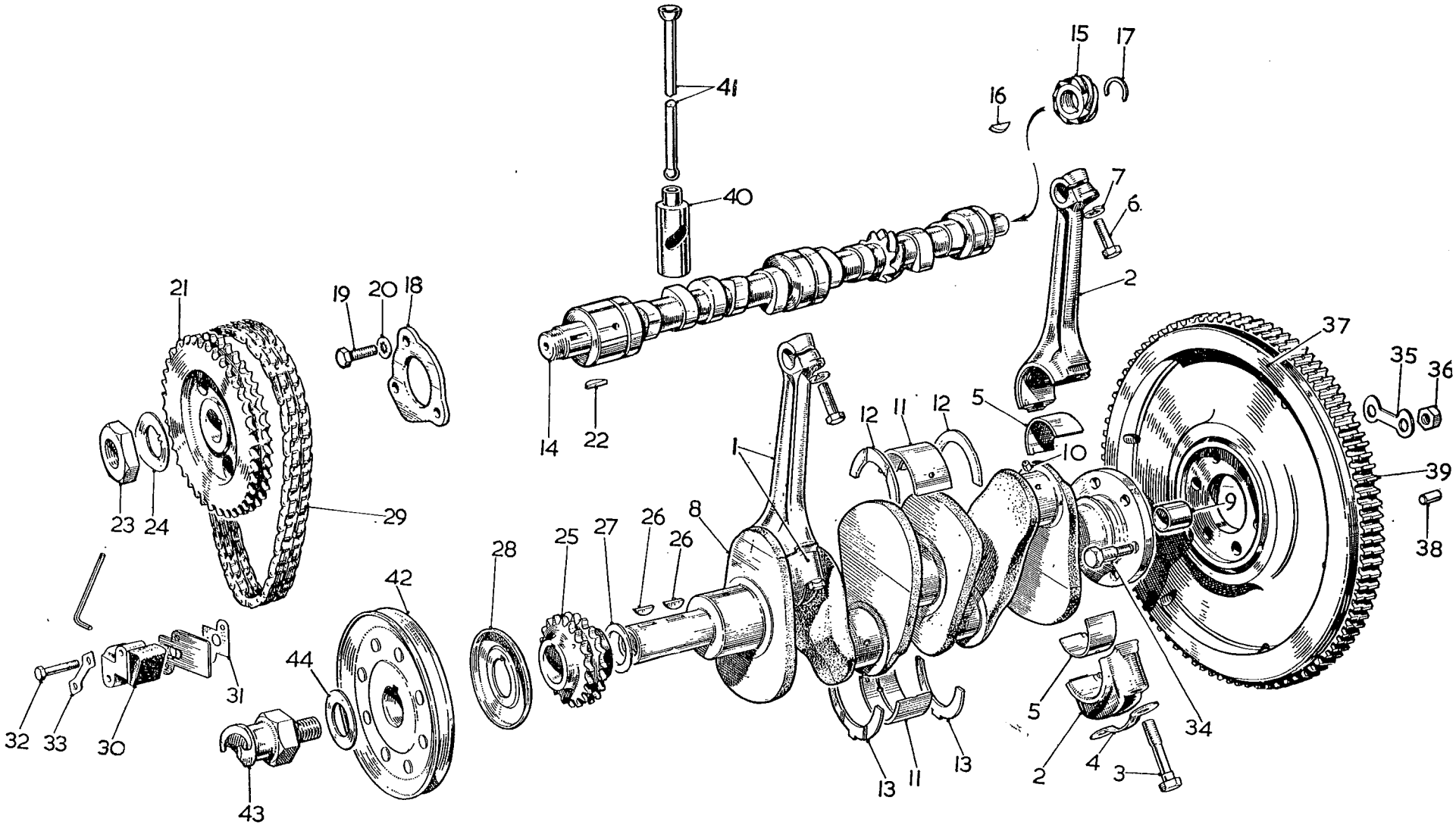

To face page A.4

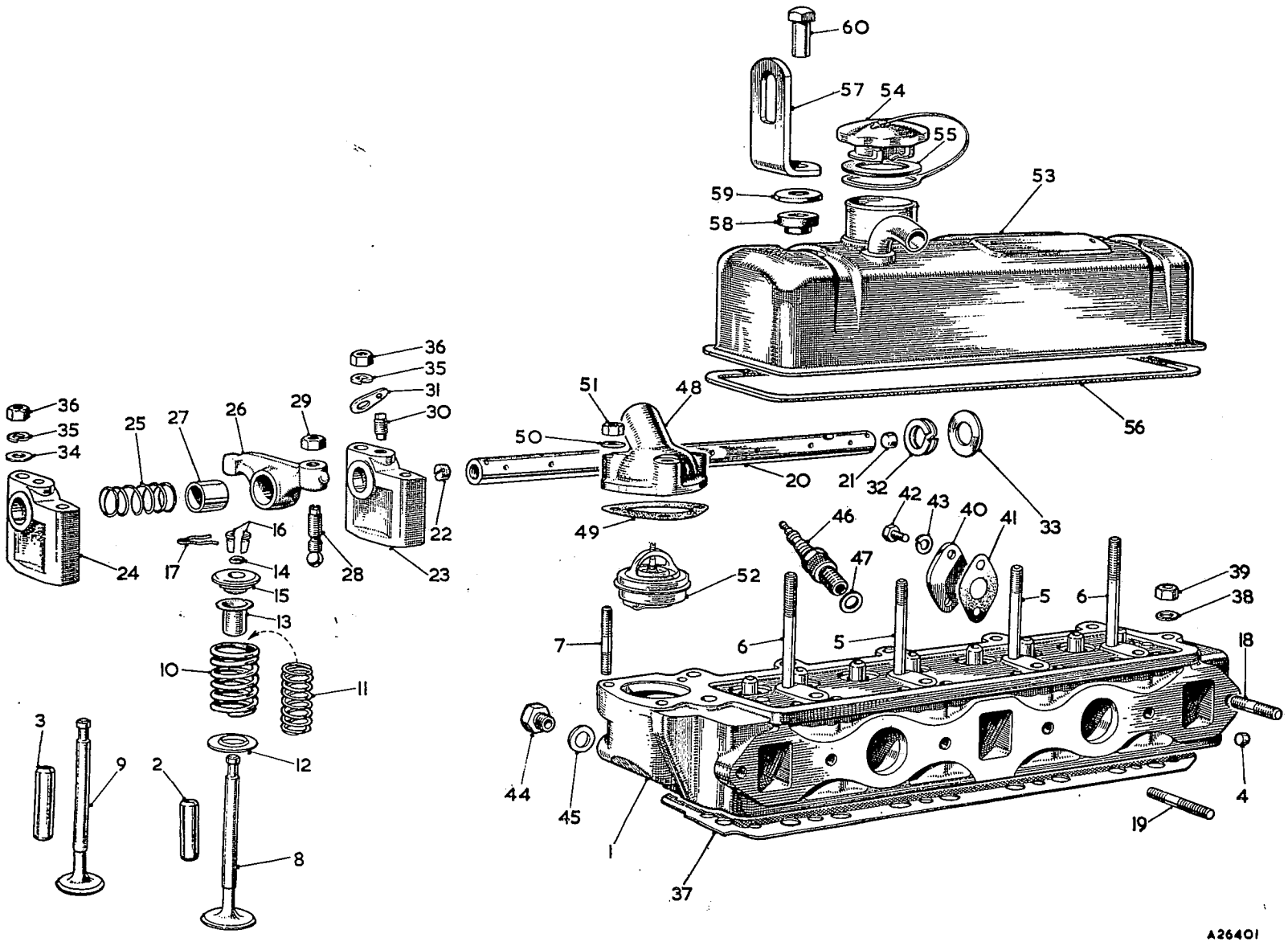

To face page A.5

Item No.	DESCRIPTION	Commencing (E) 18G/101 Part Number	Illus. No.	Qty. per Veh.	MODIFICATIONS New Part Number	MODIFICATIONS Change Point	REMARKS
	CYLINDER HEAD—VALVES—GUIDES—SPRINGS—ROCKERS						
1	**Cylinder head assembly—less rocker gear**	**48G264**		1			
2	**Cylinder head assembly—with guides**	12H434	2	4			
3	Guide—inlet valve	11G193	3	4			
4	Guide—exhaust valve	6K872	4	1			
5	Plug—oil hole	51K881	5	2			
6	Stud—short—rocker bracket	51K893	6	2			
7	Stud—long—rocker bracket	53K531	7	3			
8	Stud—water outlet elbow to head	**12H435**	8	4			
9	**Valve—inlet**	**12H436**	9	4			
10	**Valve—exhaust**	6K873	10	8			
11	Spring—outer—valve	1H723	11	8			
12	Spring—inner—valve	1H1321	12	8			
13	Collar—valve spring	1H1320	13	8			
14	Shroud—valve guide	AEK113	14	8			
15	Ring—valve packing	1H1319	15	8			
16	Cup—valve spring	1K800	16	8 prs.			
17	Cotter—valve (halves)	1K372	17	8			
18	Circlip—valve cotter	FHS2513	18	2			
19	Stud—exhaust manifold to head	53K490	19	4			
20	Stud—inlet and exhaust manifold to head	**1G2522**		1			
21	**Shaft assembly—valve rocker**	11G62	20	1			
22	Shaft—valve rocker—plugged	6K878	21	1			
23	Plug—plain—valve rocker	2K4608	22	1			
24	Plug—screwed—valve rocker	12H389	23	1			
25	Bracket—tapped—rocker shaft	12H390	24	3			
26	Bracket—plain—rocker shaft	6K871	25	3			
27	Spring—rocker spacing	**11G45**	26	8			
28	**Rocker—valve—bushed**	1G2295	27	8			
29	Bush—valve rocker	48G207	28	8			
30	Screw—adjusting—tappet	51K1178	29	8			
31	Nut—tappet adjusting screw	2A258	30	1			
32	Screw—locating—rocker shaft	2A259	31	1			
33	Plate—lock—locating screw	1A2139	32	2			
34	Washer—double coil—rocker shaft	2K6804	33	2			
35	Washer—rocker shaft						

Item No.	DESCRIPTION	Commencing (E) 18G/101 Part Number	Illus. No.	Qty. per Veh.	MODIFICATIONS New Part Number	MODIFICATIONS Change Point	REMARKS
	Cylinder Head—Valves—Guides—Springs—Rockers—*continued*						
1	Washer—plain—rocker shaft stud	PWN105	34	3			
2	Washer—spring—rocker shaft stud	2K5319	35	4			
3	Nut—rocker bracket stud	FNN105	36	4			
4	Joint washer—cylinder head	12H751	37	1			
5	Washer—cylinder head nut	PWN106	38	11			
6	Nut—cylinder head stud	51K371	39	11			
7	Plate—blanking—heater outlet elbow	1G1282	40	1			
8	Joint washer—blanking plate	1G2342	41	1			
9	Screw—plate to cylinder head	HZS0404	42	2			
10	Washer—spring—screw	LWN304	43	2			
11	Plug—thermal transmitter boss	1G2953	44	1			
12	Washer—plug	1B3664	45	1			
	SPARKING PLUGS						
13	Plug—sparking	3H2006	46	4			
14	Gasket—steel—plug	11G145	47	4			] Alternatives
15	Gasket—copper—plug	2K5211		4			
	WATER OUTLET ELBOW—THERMOSTAT						
16	**Elbow—outlet—water**	**12H797**	48	1			
17	Joint washer—elbow	12G114	49	1			
18	Washer—plain—stud in cylinder head	PWZ105	50	3			
19	Nut—stud	FNZ105	51	3			
20	**Thermostat**	**13H590**	52	1			
	VALVE ROCKER COVER—OIL FILLER						
21	**Cover—valve rocker**	**12H596**	53	1			
22	Cap and cable—oil filler	12A402	54	1			
23	Washer—oil filler cap	12A403	55	1			
24	Joint washer—valve rocker cover	12H37	56	1			
25	Bracket—engine sling	2A329	57	2			
26	Bush—rubber—cover	2K8568	58	2			
27	Washer—cup	1A2156	59	2			
28	Nut—cap—rocker cover	2A150	60	2			

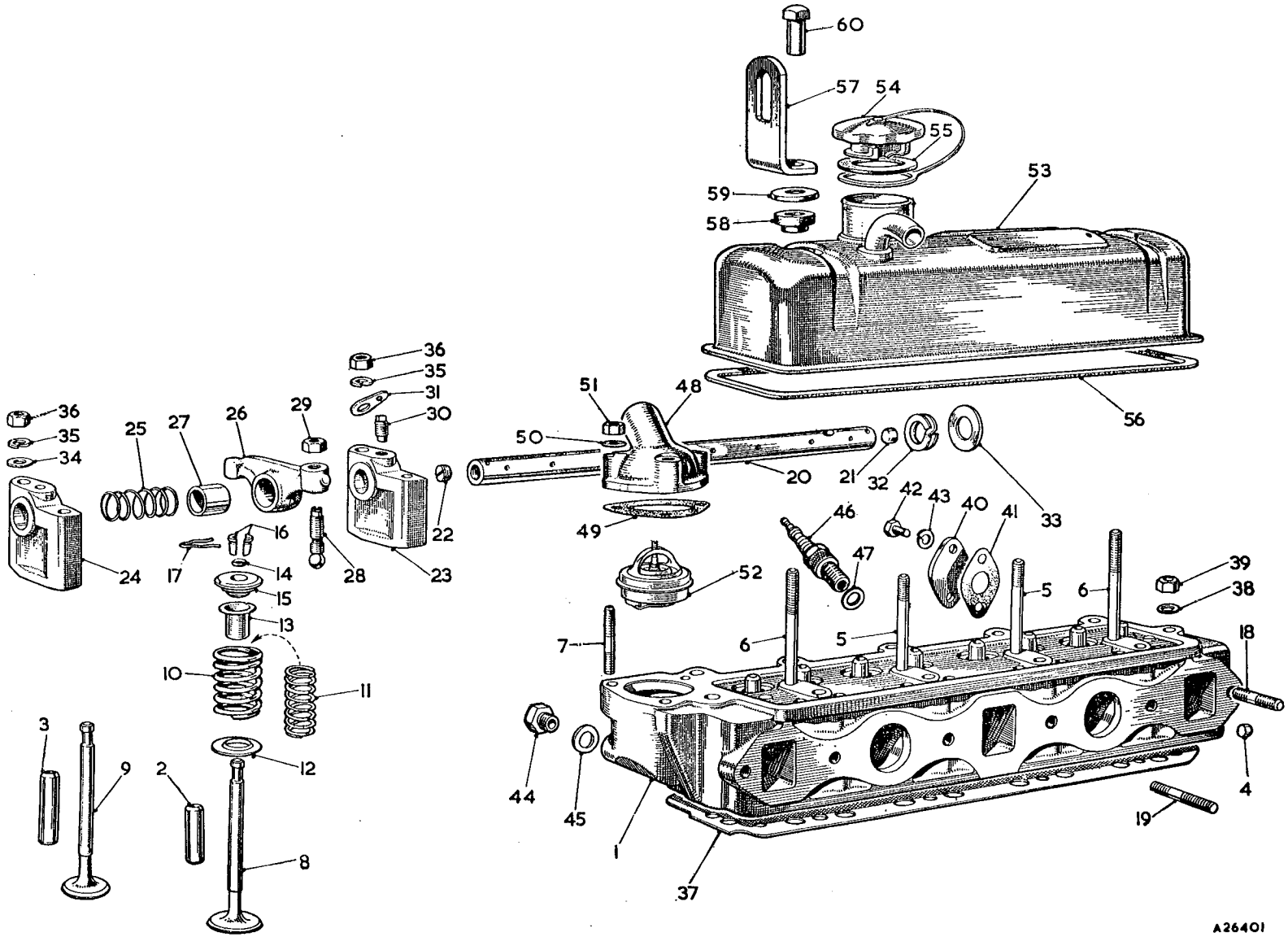

To face page A.6

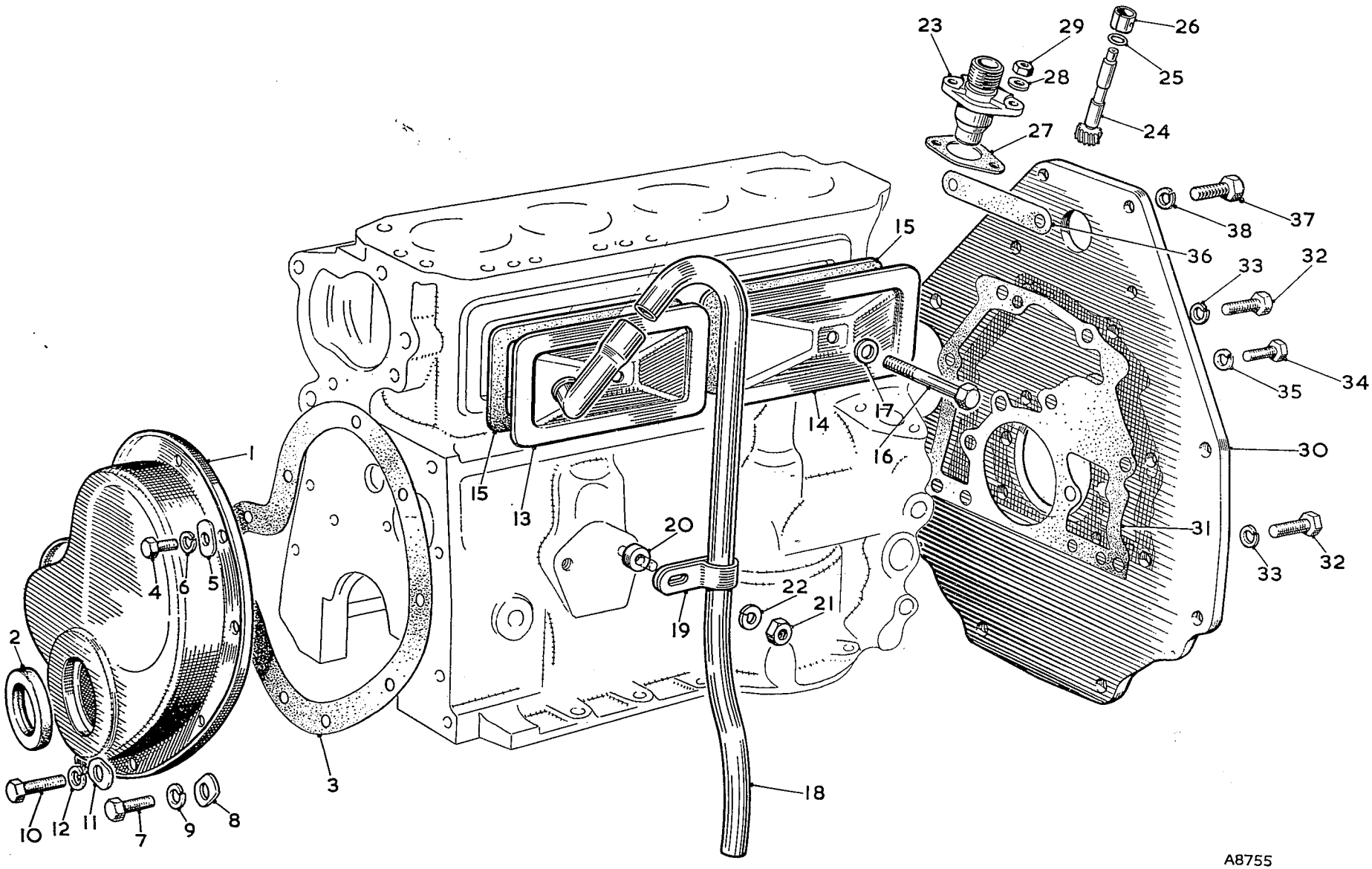

To face page A.7

Item No.	DESCRIPTION	Commencing (E) 18G/101 Part Number	Illus. No.	Qty. per Veh.	MODIFICATIONS New Part Number	MODIFICATIONS Change Point	REMARKS
	CYLINDER FRONT AND SIDE COVERS						
1	**Cover—front with oil catcher and felt**	**12H771**	**1**	**1**			
2	Seal—oil	2A939	2	1			
3	Joint washer—crankcase front cover	12H770	3	1			
4	Screw—front cover to front plate	HZS0403	4	3			
5	Washer—screw	2K5197	5	3			
6	Washer—spring—screw	LWN204	6	3			
7	Screw—front cover and plate to crankcase	HZS0506	7	4			
8	Washer—screw	2K7440	8	4			
9	Washer—spring—screw	LWN205	9	4			
10	Screw—front cover to bearing cap	HZS0406	10	2			
11	Washer—screw	2K5197	11	2			
12	Washer—spring—screw	LWN204	12	2			
13	**Cover—cylinder side—with elbow—front**	**12H156**	**13**	**1**			
14	**Cover—cylinder side—rear**	**12H152**	**14**	**1**			
15	Joint washer—side cover to crankcase	12A24	15	2			
16	Screw—side cover to crankcase	HBZ0513	16	2			
17	Washer—screw	2K4958	17	2			
18	Pipe—crankcase vent	1H871	18	1			
19	Clip—crankcase vent pipe	1G2602	19	1			
20	Distance piece—clip to crankcase	1H840	20	1			
21	Nut—stud—pipe to crankcase	FNZ105	21	1			
22	Washer—spring—nut	LWZ205	22	1			
	TACHOMETER DRIVE						
23	Housing—tachometer pinion drive	1H591	23	1			
24	**Pinion—tachometer drive**	**1H721**	**24**	**1**			
25	Oil seal—pinion	1G2398	25	1			
26	Ring—oil seal retaining	1G2399	26	1			
27	Joint washer—tachometer pinion housing	1G2401	27	1			
28	Washer—plain—tachometer housing stud	PWZ105	28	2			
29	Nut—stud	FNZ105	29	2			
	GEARBOX MOUNTING PLATE						
30	Plate—gearbox mounting	12H752	30	1			
31	Joint washer—mounting plate to crankcase	12H768	31	1			
32	Screw—mounting plate to crankcase	53K1779	32	8			
33	Washer—spring—screw	LWZ306	33	8			
34	Screw—mounting plate to crankcase	53K1778	34	4			
35	Washer—spring—screw	LWZ305	35	4			
36	Joint washer—upper—mounting plate to crankcase	12H762	36	1			
37	Screw—mounting plate to crankcase	HZS0608	37	2			
38	Washer—spring—screw	LWZ306	38	2			

Item No.	DESCRIPTION	Commencing (E) 18G/101 Part Number	Illus. No.	Qty. per Veh.	MODIFICATIONS New Part Number	MODIFICATIONS Change Point	REMARKS
	OIL PUMP—STRAINER—RELEASE VALVE						
1	**Pump assembly—oil**	**1H1191**		1			
2	Body with plug	7H1790	1	1			**Alternative to 12H184**
3	Cover	17H1712	2	1			
4	Screw—short—cover	HNS0408	3	1			
5	Screw—long—cover	HNS0414	4	1			
6	Washer—screw	LWN204	5	2			
7	Dowel	7H1793	6	2			
8	Shaft with rotors—driving	7H1792	7	1			
9	**Pump assembly—oil**	**12H184**		1			
10	Joint—pump to crankcase	11G10	8	1			**Alternative to 1H1191**
11	Spindle—oil pump driving	11G12	9	1			
12	Washer—plain—stud	PWN105	10	3			
13	Washer—spring—stud	2K5319	11	3			
14	Nut—stud—oil pump to crankcase	FNN105	12	3			
15	Strainer—oil	12H398	13	1			
16	Joint washer—strainer to pump	1H1198	14	1			
17	Bolt—oil strainer to pump	HNS0407	15	3			
18	Washer—spring—bolt	LWN304	16	3			
19	**Valve—oil release**	**1G1452**	17	1			
20	Spring—oil release valve	1H756	18	1			
21	Washer—oil release valve cap nut	2K4982	19	2			
22	Cap nut—oil release valve	1A2206	20	1			
23	Union—oil pressure gauge pipe	11G15	21	1			
24	Washer—union	6K638	22	1			
	OIL RESERVOIR—DIPPER ROD						
25	**Reservoir—oil**	**12H395**	23	1			
26	Plug—drain	2F4249	24	1			
27	Washer—drain plug	6K638	25	1			
28	Joint washer—reservoir to crankcase	12H597	26	1			
29	Joint washer—reservoir to crankcase	12H813		1			] Alternatives
30	Screw assembly—reservoir to crankcase	6K639	27	19			
31	Tube—oil dipper rod	1B1063	28	1			
32	Rod—oil level indicator	12H74	29	1			
33	Cover—dust—oil level indicator	1B1735	30	1			

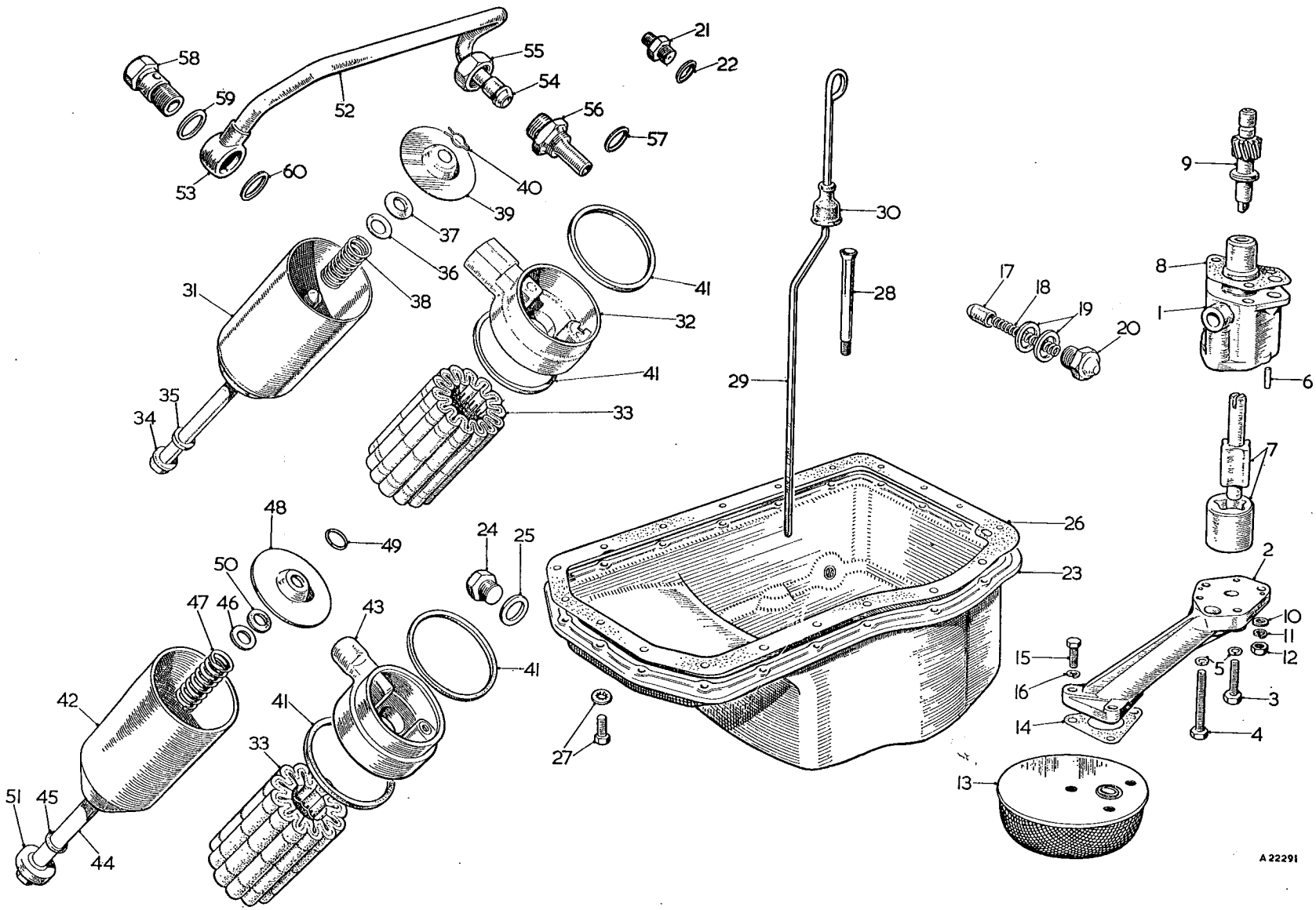

To face page A.8

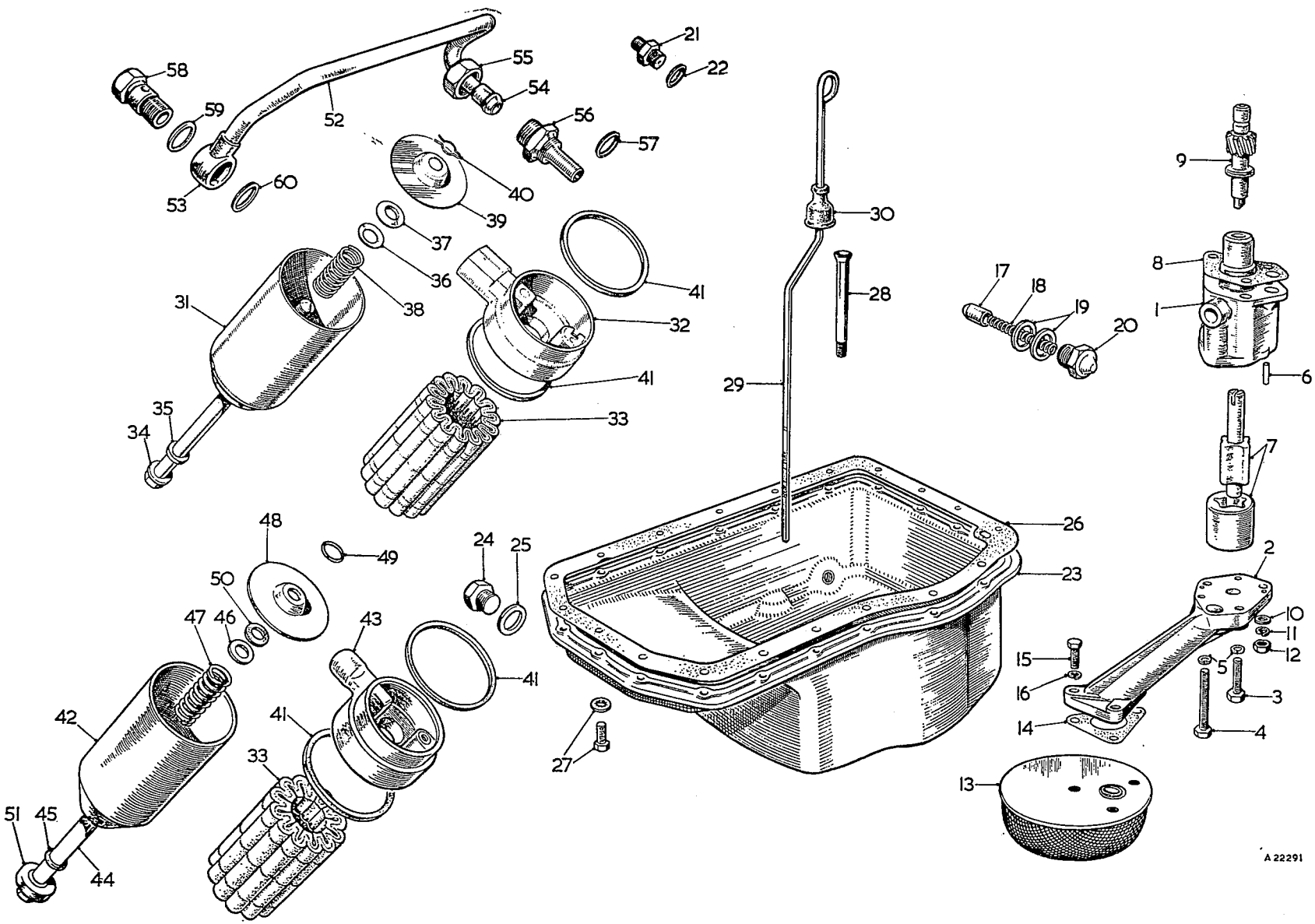

To face page A.9

Item No.	DESCRIPTION	Commencing (E) 18G/101 Part Number	Illus. No.	Qty. per Veh.	MODIFICATIONS New Part Number	MODIFICATIONS Change Point	REMARKS
	OIL FILTER AND PIPE						
1	**Filter assembly—oil (Tecalemit)**	**1H1067**		1			**Alternative to 1H1051**
2	Container	NSP	31	1			
3	Head assembly	1H1068	32	1			
4	Element	8G683	33	1			
5	Centre bolt	7H1965	34	1			
6	Washer—sealing	7H1948	35	1			
7	Washer—steel	7H1969	36	1			
8	Washer—felt	7H1968	37	1			
9	Spring	7H1764	38	1			
10	Plate—pressure	17H846	39	1			
11	Circlip	7H1952	40	1			
12	Joint ring—body to filter head and crankcase	8G619	41	2			
13	**Filter assembly—oil (Purolator)**	**1H1051**		1			**Alternative to 1H1067**
14	Body assembly	NSP	42	1			
15	Head assembly	1H1052	43	1			
16	Element	8G683	33	1			
17	Centre bolt	17H1558	44	1			
18	Ring—sealing	17H1556	45	1			
19	Washer	17H1448	46	1			
20	Spring	17H1449	47	1			
21	Plate—pressure	17H1446	48	1			
22	Circlip	37H996	49	1			
23	Joint ring—body to filter and crankcase	8G619	41	2			
24	Seal	17H1447	50	1			
25	Collar—centre bolt	17H1559	51	1			
26	**Pipe assembly—filter to crankcase**	**1H1056**	**52**	1			Not required when oil cooler is fitted
27	Banjo union	1K2141	53	1			
28	Nipple—pipe	2K5163	54	1			
29	Nut—nipple	2K5164	55	1			
30	Adaptor—full-flow filter connection	1H922	56	1			
31	Joint washer—adaptor	6K501	57	1			
32	Screw—banjo union	1K2142	58	1			Not required when oil cooler is fitted
33	Washer—outer—screw	1H898	59	1			
34	Washer—inner—screw	6K501	60	1			

Item No.	DESCRIPTION	Commencing (E) 18G/101 Part Number	Illus. No.	Qty. per Veh.	MODIFICATIONS New Part Number	MODIFICATIONS Change Point	REMARKS
	WATER PUMP AND PULLEY						
1	**Pump assembly—water (with hub less pulley)**	**12H799**	1	1			
2	Body—water pump	NSP		1			
3	Vane—water pump	12B173	2	1			
4	Bearing assembly complete with spindle	1H1153	3	1			
5	Wire—bearing locating	2A778	4	1			
6	Screw—lubricating point	53K1433	5	1			
7	Washer—fibre—screw	2K4974	6	1			
8	Hub—pulley	1H1154	7	1			
9	Seal—water pump	13H591	8	1			
10	**Pulley—fan and water pump**	**12B174**	9	1			
11	Joint washer—pump to crankcase	12H814	10	1			
12	Washer—spring—screw	2K5319	11	4			
13	Screw—long—water pump to crankcase	HBZ0514	12	2			
14	Screw—short—water pump to crankcase	HZS0510	13	2			
	DYNAMO AND DISTRIBUTOR MOUNTING						
15	Bracket—rear—dynamo	2A758	14	1			
16	Washer—spring—screw	2K5319	15	2			
17	Screw—dynamo bracket to crankcase	HZS0506	16	2			
18	Pillar—dynamo adjusting link	2A128	17	1			
19	Washer—spring—pillar	LWN306	18	1			
20	Nut—dynamo pillar	FNZ506	19	1			
21	Housing—distributor	1G2285	20	1			
22	Screw—housing to crankcase	53K1206	21	1			
23	Spindle—distributor driving	2A139	22	1			] Alternatives
24	Spindle—distributor driving	2A847		1			
25	**Pulley—dynamo**	**12H71**	23	1			
26	Fan—dynamo	17D11	24	1			
27	Link—dynamo adjusting	12H67	25	1			
28	Washer—adjusting link to pillar	PWN106	26	1			
29	Washer—spring	LWZ306	27	1			
30	Nut—adjusting link to pillar	LNZ206	28	1			
31	Screw—adjusting link to pillar	ZCS0505	29	1			
32	Washer—spring—screw	2K5319	30	1			
33	Bolt—dynamo to mounting bracket	HZS0509	31	1			
34	Washer—spring—bolt	2K5319	32	1			
35	Nut—bolt	LNZ205	33	1			
36	Bolt—dynamo to water pump body	HBZ0513	34	1			
37	Washer—spring—bolt	2K5319	35	1			
38	Nut—bolt	LNZ205	36	1			

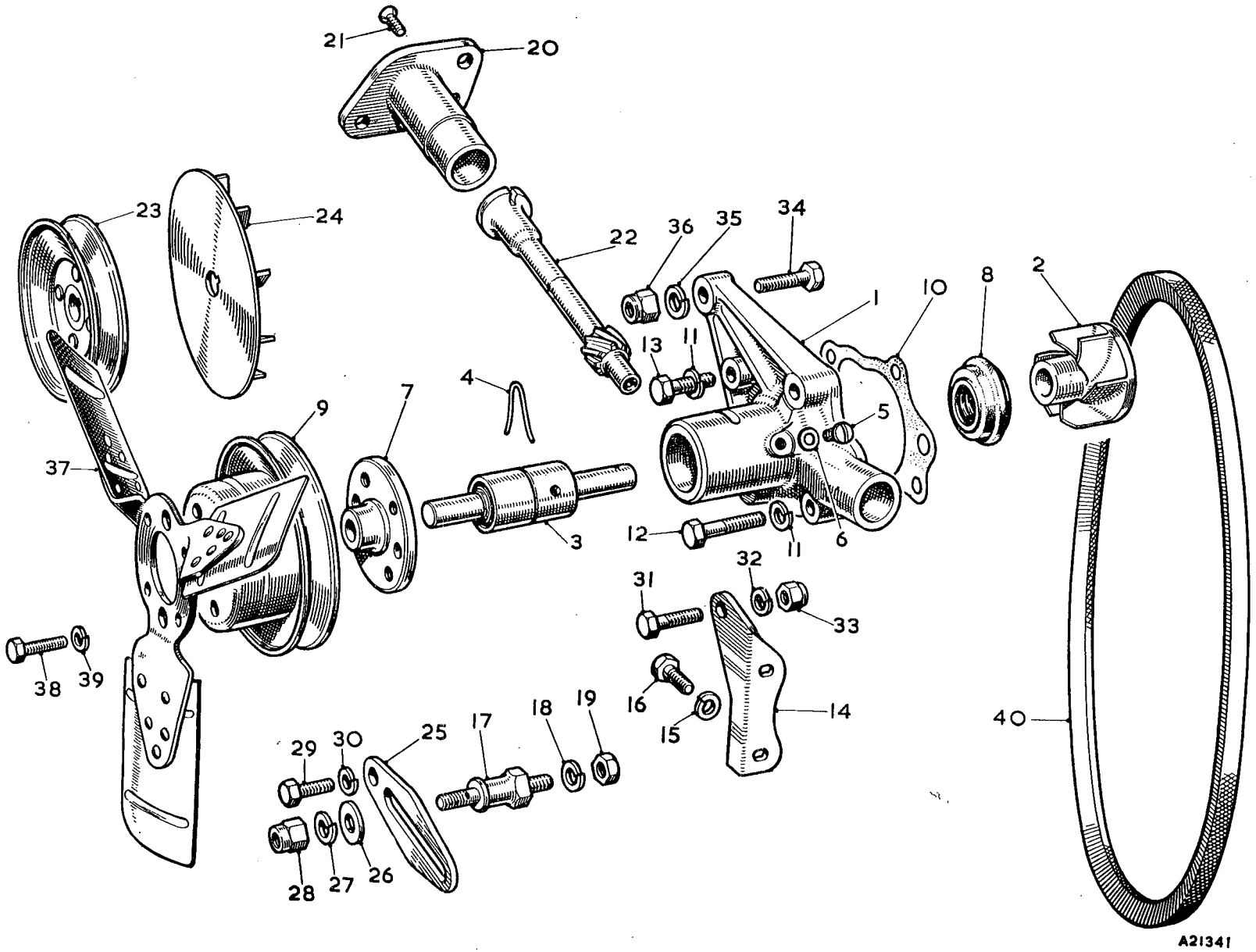

To face page A.10

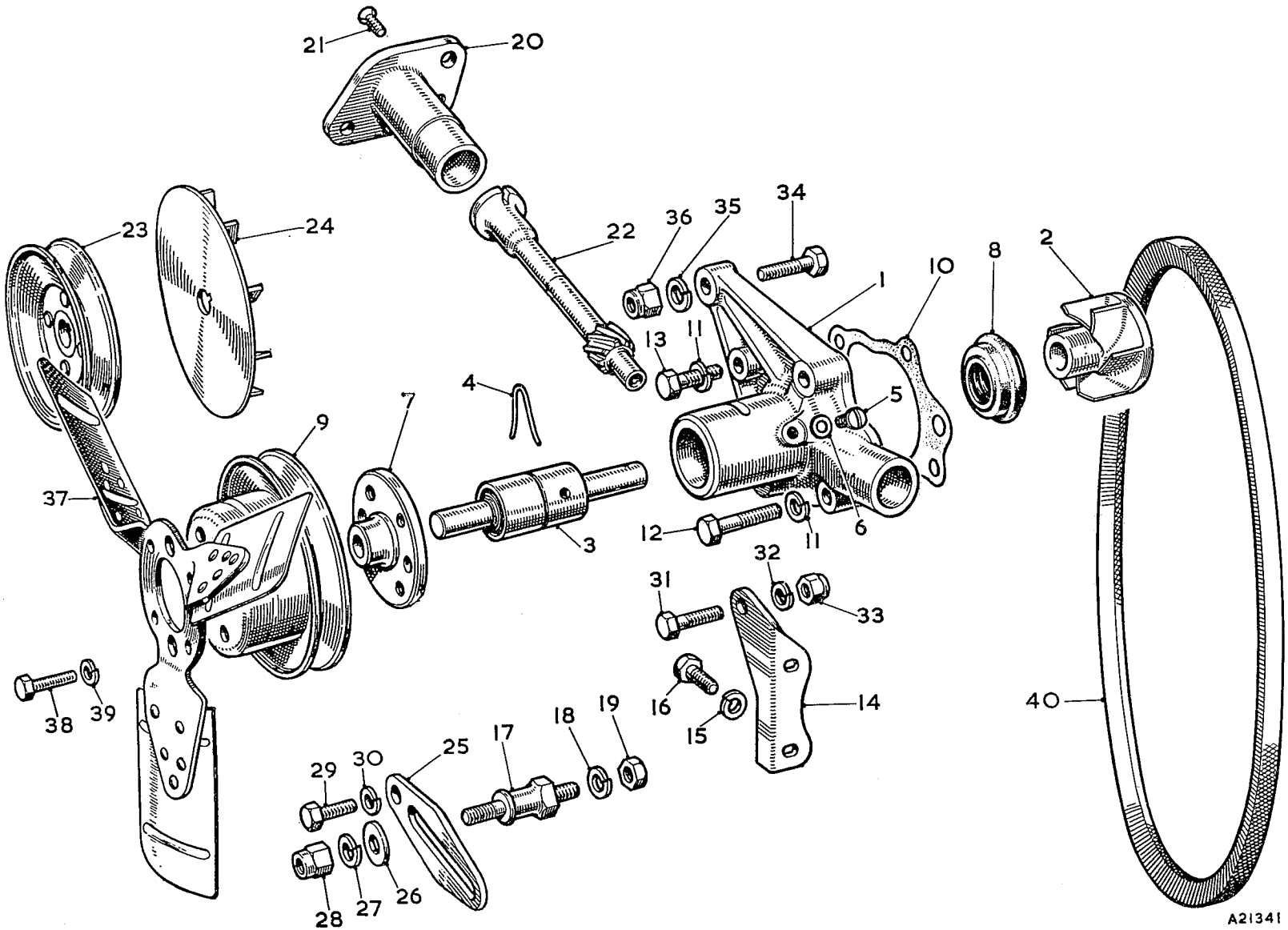

To face page A.11

Item No.	DESCRIPTION	Commencing (E) 18G/101 Part Number	Illus. No.	Qty. per Veh.	MODIFICATIONS New Part Number	MODIFICATIONS Change Point	REMARKS
	FAN AND FAN BELT						
1	**Fan—water pump—(3-bladed)**	**12H836**	**37**	**1**			
2	Screw—fan to pulley	HZS0406	38	4			
3	Washer—spring—screw	LWN304	39	4			
4	**Belt—fan**	**1H1001**	**40**	**1**			
	CYLINDER LINER						
5	Liner—cylinder	12H888		4			Service purposes only

OIL COOLER

Item No.	DESCRIPTION	Commencing (C) GHN3/101 Part Number	Illus. No.	Qty. per Veh.	MODIFICATIONS New Part Number	MODIFICATIONS Change Point	REMARKS
1	**Cooler—oil**	**ARH181**	1	1			
2	Screw—cooler to front apron	HZS0405	2	4			
3	Washer—plain—screw	PWZ104	3	4			
4	Washer—spring—screw	LWZ204	4	4			
5	**Pipe—flexible**	**AHH6715**	5	2			
6	Grommet	AHH6551	6	2			
7	Clip—flexible pipe	AHH6863	7	1			
8	Strap—support	AHH6864	8	1			
9	Screw—clip to support strap	PMZ0308	9	1			
10	Washer—spring	LWZ203	10	1			
11	Nut	FNZ103	11	1			
12	Clip—strap (rubber)	AHH6865	12	2			
13	Plate—clamp—strap clip	AHH6866	13	4			
14	Screw	PMZ0314	14	2			
15	Washer—spring	LWZ203	15	2			
16	Nut	FNZ103	16	2			

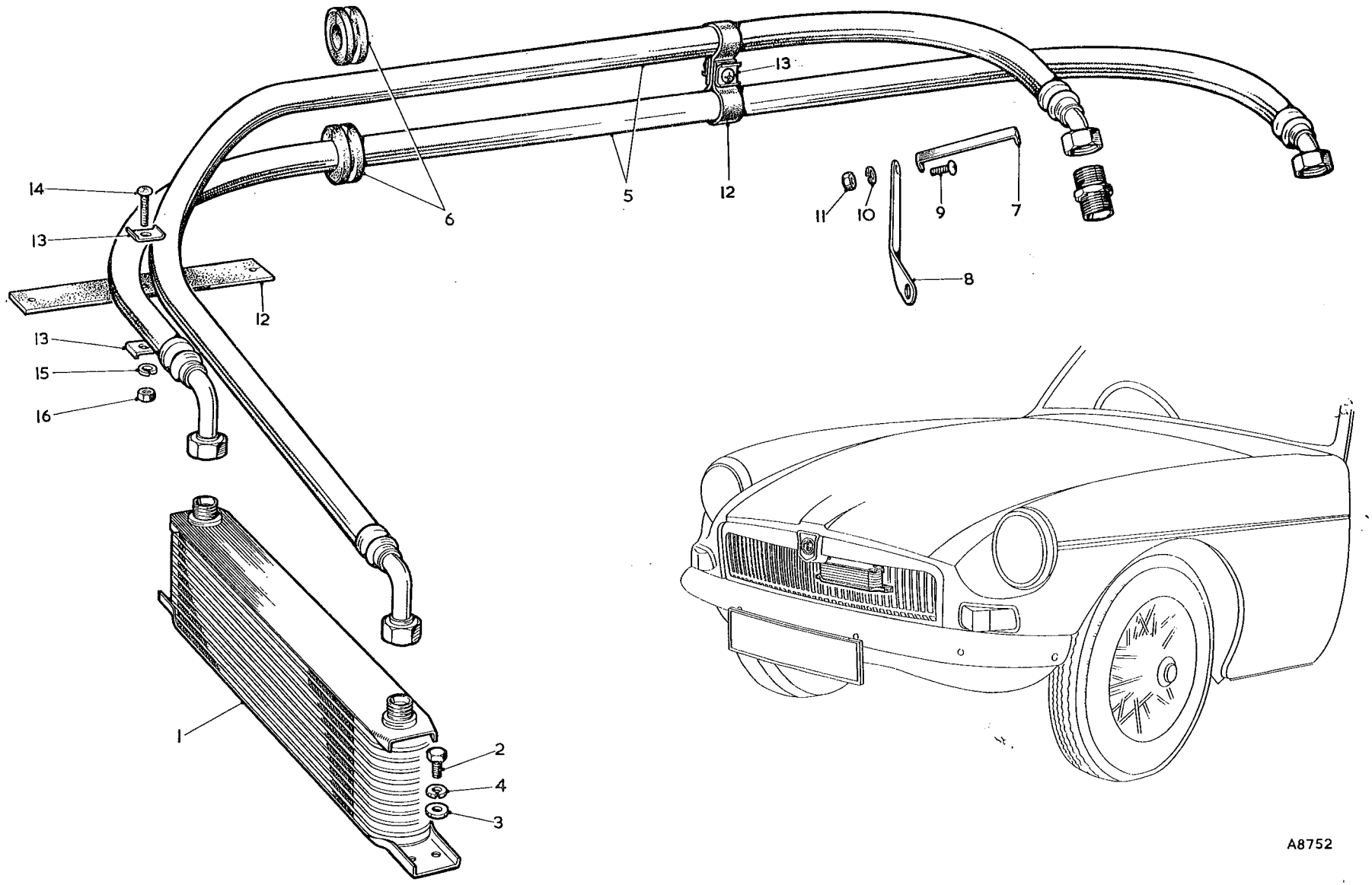

To face page A.12

Item No.	DESCRIPTION	Commencing (E) 18G/101 Part Number	Illus. No.	Qty. per Veh.	MODIFICATIONS New Part Number	MODIFICATIONS Change Point	REMARKS
	ENGINE SERVICE KITS						
1	**Joint washer set—engine decarbonizing**	**48G281**		1			
2	Joint washer—cylinder head			1			
3	Joint washer—manifold to cylinder head			1			
4	Joint washer—valve rocker cover			1			
5	Ring—valve packing			8			
6	Joint washer—water outlet elbow			1			
7	Joint washer—carburetter			4			
8	Joint washer—heater outlet blanking plate			1			
9	Joint washer—air cleaner to carburetter			2			
10	**Joint washer set—engine supplementary**	**48G282**		1			**Use together with 48G281 for engine complete overhaul**
11	Joint strip—main bearing cap			2			
12	Joint washer—strainer to oil pump			1			
13	Joint washer—oil pump to crankcase			1			
14	Joint washer—oil reservoir			1			
15	Joint washer—cylinder side cover			2			
16	Joint washer—water pump to crankcase			1			
17	Washer—drain plug			1			
18	Joint washer—gearbox to mounting plate			1			
19	Joint washer—upper—mounting plate to crankcase			1			
20	Joint washer—oil filter to crankcase			1			
21	Joint washer—oil pipe adaptor			1			
22	Joint washer—front mounting plate			1			
23	Joint washer—crankcase front cover			1			
24	Joint washer—chain tensioner			1			
25	Washer—cylinder drain tap			1			
26	**Chain tensioner servicing kit**	**17H341**		1			
27	Spring			1			
28	Plug—bottom			1			
29	Washer—tab			1			
30	Cylinder			1			

Item No.	DESCRIPTION	Commencing (E) 18G/101 Part Number	Illus. No.	Qty. per Veh.	MODIFICATIONS New Part Number	MODIFICATIONS Change Point	REMARKS
	INLET AND EXHAUST MANIFOLDS						
1	**Manifold—inlet**	**12H708**	1	1			
2	Plug (welch)	2K8159	2	2			
3	Stud—carburetter to manifold	CHS2522	4	4			
4	Nut—carburetter to manifold	FNZ105	5	4			
5	Washer—spring	LWZ205	6	4			
6	Washer—plain	PWZ105	7	2			
7	Screw—inlet manifold—top blanking	HZS0505	8	2			
8	Washer—spring	LWZ205	9	2			
9	Washer—plain	PWZ205	10	2			
10	Screw—inlet manifold blanking	HZS1005	11	1			
11	Washer—plain	PWZ110	12	1			
12	**Manifold—exhaust**	**12H709**	13	1			
13	Stud—outlet flange	CHS2513	14	6			
14	Washer—spring	LWZ205	15	6			
15	Nut—stud (brass)	BNN105	16	6			
16	Yoke—manifold	1G2418	17	4			
17	Joint—manifold to head	1G2417	18	1			
18	Stud—exhaust manifold to cylinder head						] See page A.5
19	Stud—inlet and exhaust manifold to cylinder head						
20	Washer—spring—cylinder head stud	LWZ205	19	6			
21	Nut—stud	AHH5171	20	6			

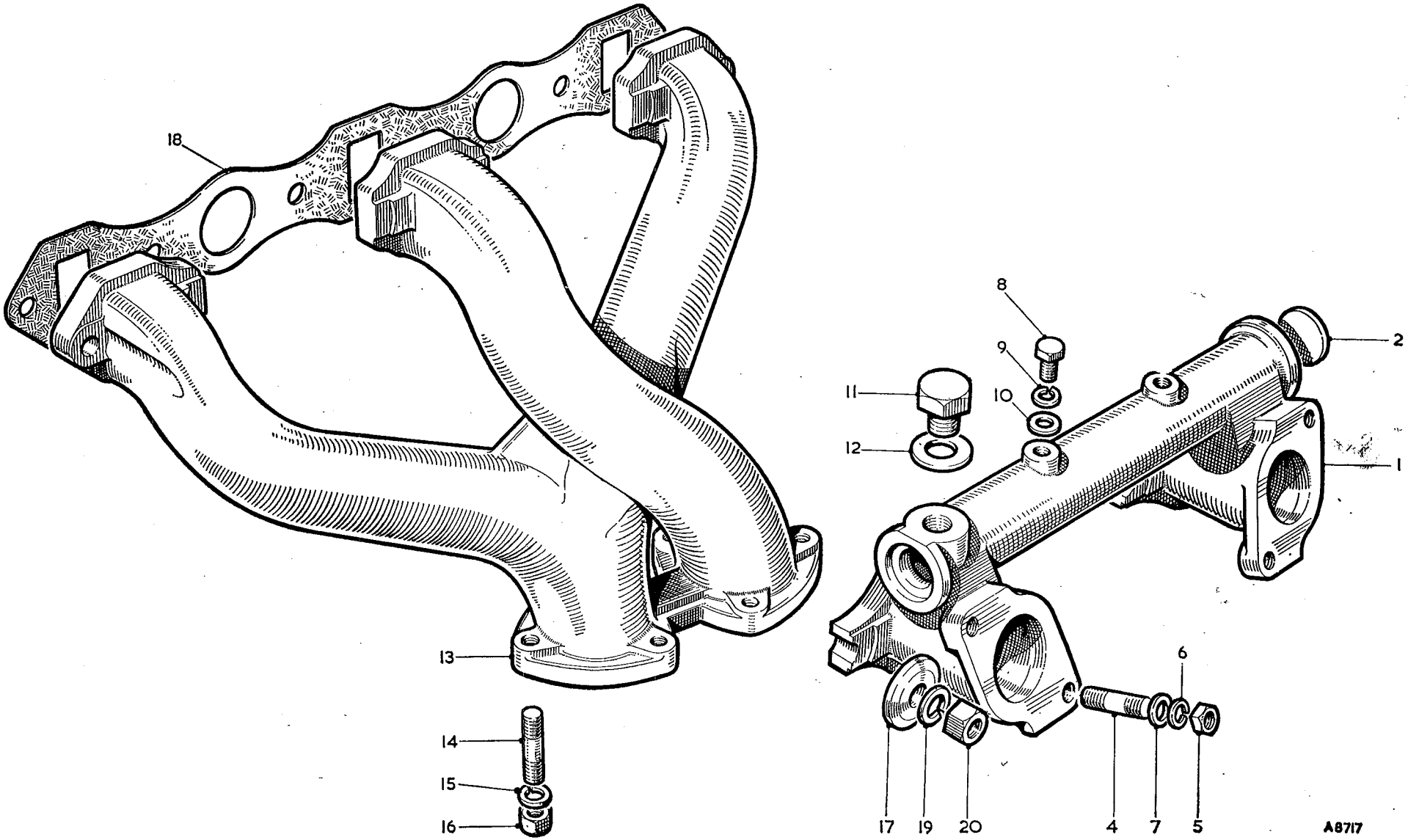

To face page A.14

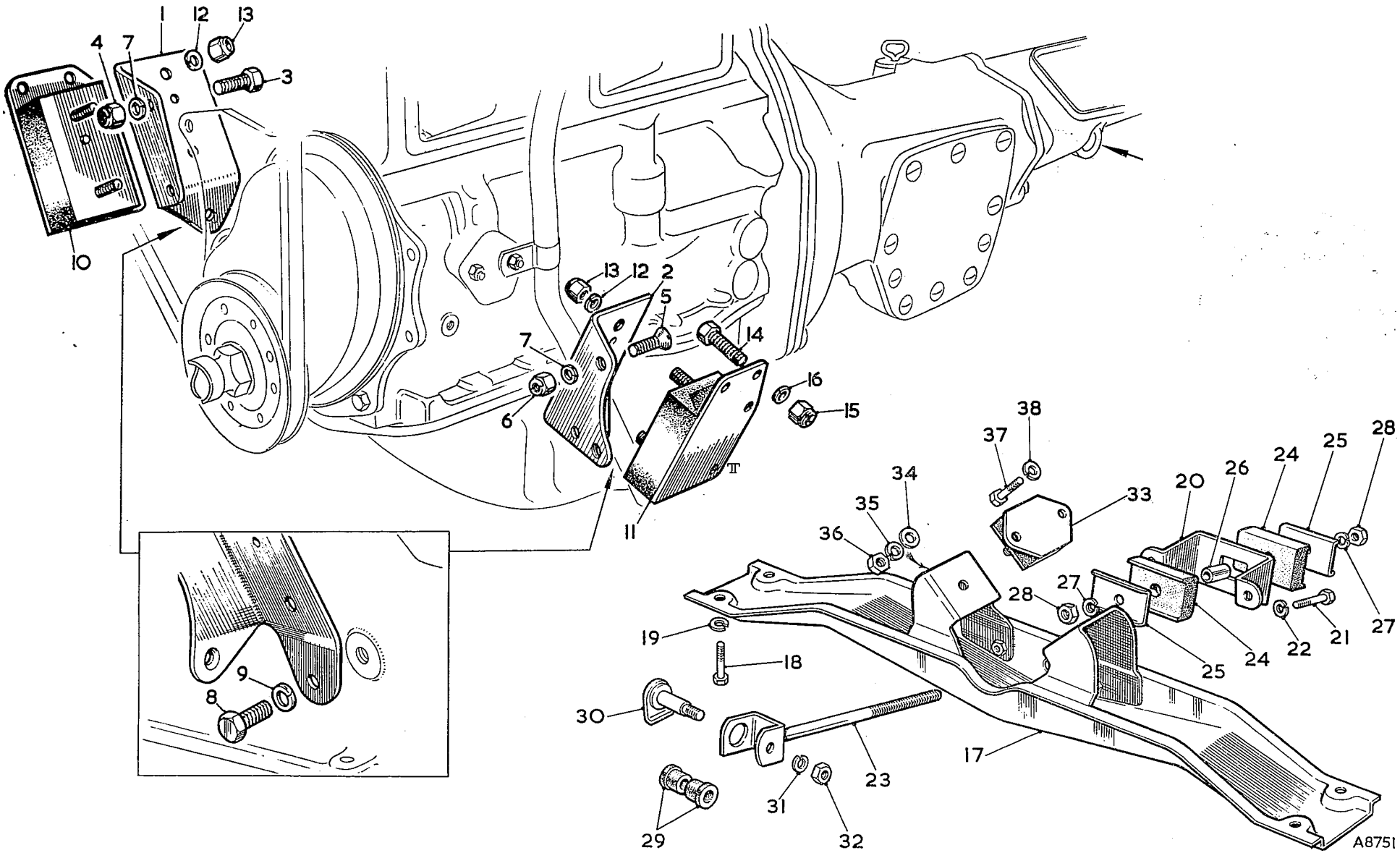

To face page A.15

Item No.	DESCRIPTION	Commencing (E) 18G/101 Part Number	Illus. No.	Qty. per Veh.	MODIFICATIONS New Part Number	MODIFICATIONS Change Point	REMARKS
	ENGINE MOUNTING						
1	**Bracket—front engine mounting—RH**	**AHH5065**	1	1			
2	**Bracket—front engine mounting—LH**	**AHH5066**	2	1			
3	Screw—bracket to mounting plate—RH	HZS0508	3	2			
4	Nut—screw	LNZ105	4	2			
5	Screw—bracket to mounting plate—LH	CMZ0516	5	2			
6	Nut—screw	LNZ105	6	2			
7	Washer—spring	LWZ205	7	4			
8	Screw—bracket to block	HZS0606	8	2			
9	Washer—spring	LWZ206	9	2			
10	**Rubber—front engine mounting—RH**	**AHH5027**	10	1			
11	**Rubber—front engine mounting—LH**	**AHH5028**	11	1			
12	Washer—spring—mounting to bracket	LWZ205	12	4			
13	Nut—mounting to bracket	FNZ105	13	4			
14	Screw—mounting and coil bracket to frame bracket	HZS0506	14	8			
15	Nut—screw	FNZ105	15	8			
16	Washer—spring	LWZ205	16	8			
17	**Cross-member assembly—rear mounting**	**AHH6134**	17	1			
18	Screw—cross-member to frame	HZS0607	18	4			
19	Washer—spring	LWZ206	19	4			
20	Bracket—engine stay rod	AHH6298	20	1			
21	Screw—bracket	HZS0405	21	2			
22	Washer—spring	LWZ204	22	2			
23	Stay rod—engine	AHH6056	23	1			
24	Buffer—stay rod	1G8781	24	2			
25	Plate—buffer	1G8782	25	2			
26	Distance tube for stay rod	1G8775	26	1			
27	Washer—spring—stay rod	LWZ306	27	2			
28	Nut—stay rod	FNZ106	28	2			
29	Bush—shouldered—gearbox rear extension	1B8347	29	2			
30	Pin—stay rod	1G9384	30	1			
31	Washer—spring—stay rod pin	LWZ306	31	1			
32	Nut—stay rod pin	FNZ106	32	1			
33	Mounting—engine—rear	11B5074	33	2			
34	Washer—plain—rear mounting to cross-member	PWZ105	34	2			
35	Washer—spring—rear mounting to cross-member	LWZ305	35	2			
36	Nut—rear mounting to cross-member	FNZ105	36	2			
37	Screw—rear mounting to gearbox	ZCS0505	37	4			
38	Washer—spring	LWZ305	38	4			

Item No.	DESCRIPTION	Commencing (E) 18G/101 Part Number	Illus. No.	Qty. per Veh.	MODIFICATIONS New Part Number	MODIFICATIONS Change Point	REMARKS
	EXHAUST SYSTEM						
1	**Pipe and junction assembly—front**	**ARH1809**	1	1			
2	Pipe—intermediate—front	ARH1810	2	1			
3	**Silencer—front**	~~**ARH1170**~~	3	1	886401		
4	Pipe—intermediate—rear	ARH1811	4	1			
5	Bracket—mounting—rear	ARH952	5	1			
6	**Silencer and tail pipe assembly—rear**	**ARH1813**	6	1			
7	Joint—exhaust pipe to manifold	AHH6358	7	1			
8	Strap—exhaust mounting—front	AHH6479	8	1			
9	Bracket—exhaust mounting—front	AHH6480	9	1			
10	Screw—strap to bracket	HZS0506	10	1			
11	Washer—plain—screw	PWZ105	11	1			
12	Washer—spring—screw	LWZ205	12	1			
13	Nut—screw	FNZ105	13	1			
14	Bolt—strap to pipe	HZS0508	14	1			
15	Washer—spring—bolt	LWZ205	15	1			
16	Nut—bolt	FNZ105	16	1			
17	Mounting—intermediate pipe—rear	AHH6080	17	1			
18	Bush—mounting	AHH5403	18	2			
19	Housing—mounting	AHH5404	19	1			
20	Bolt—bush and housing to pipe	HBZ0522	20	1			
21	Washer—spring—bolt	LWZ205	21	1			
22	Nut—bolt	FNZ105	22	1			
23	Screw—mounting to frame	HZS0404	23	2			
24	Washer—spring—screw	LWZ204	24	2			
25	Screw—housing to mounting	HZS0404	25	2			
26	Washer—spring—screw	LWZ204	26	2			
27	Nut—screw	FNZ104	27	2			
28	Mounting—exhaust pipe—rear	AHH6081	28	1			
29	Bolt—rear mounting and tail pipe	HBZ0422	29	1			
30	Washer—plain—screw	PWZ104	30	1			
31	Washer—spring—screw	LWZ204	31	1			
32	Nut—bolt	HBZ0422	32	1			
33	Screw—mounting to frame	HZS0404	33	2			
34	Washer—spring—screw	LWZ204	34	2			

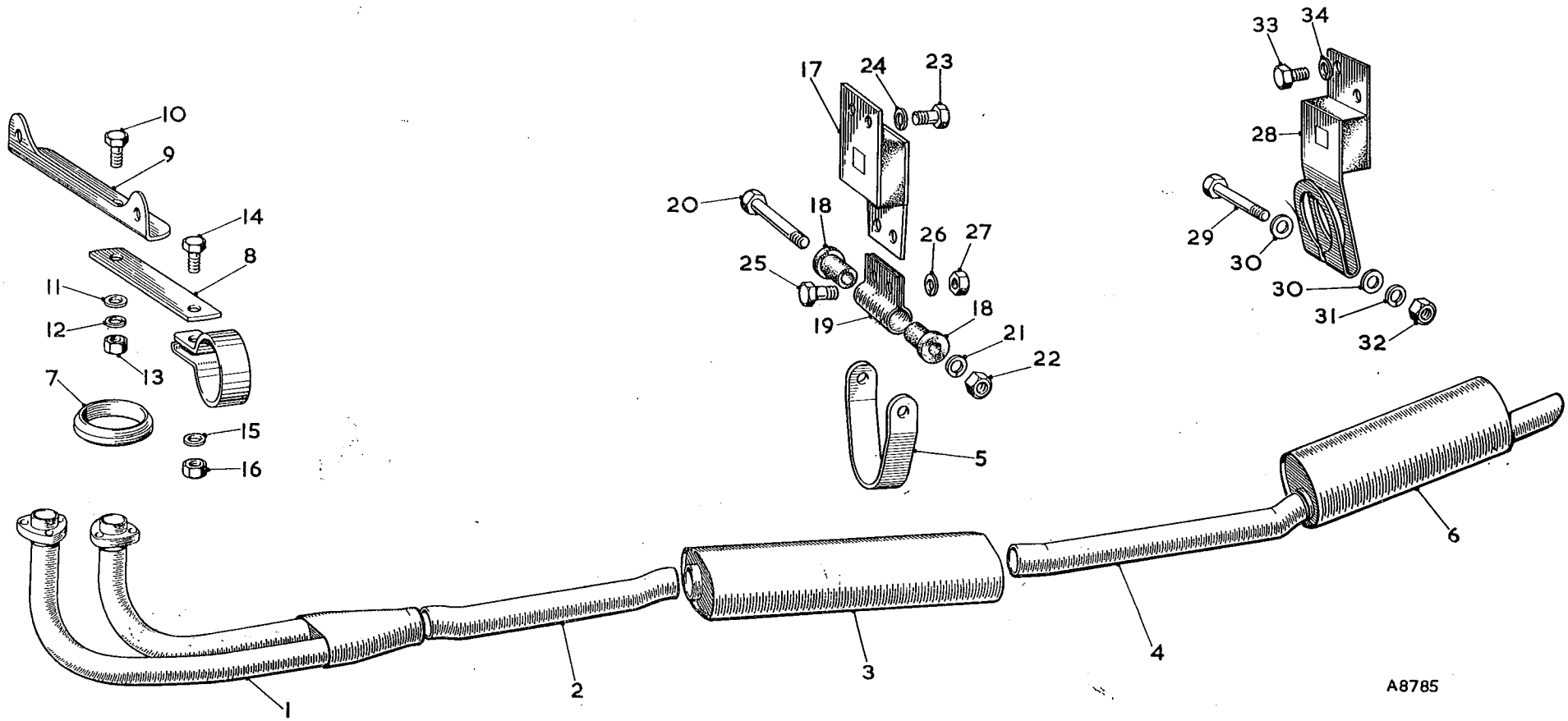

To face page A.16

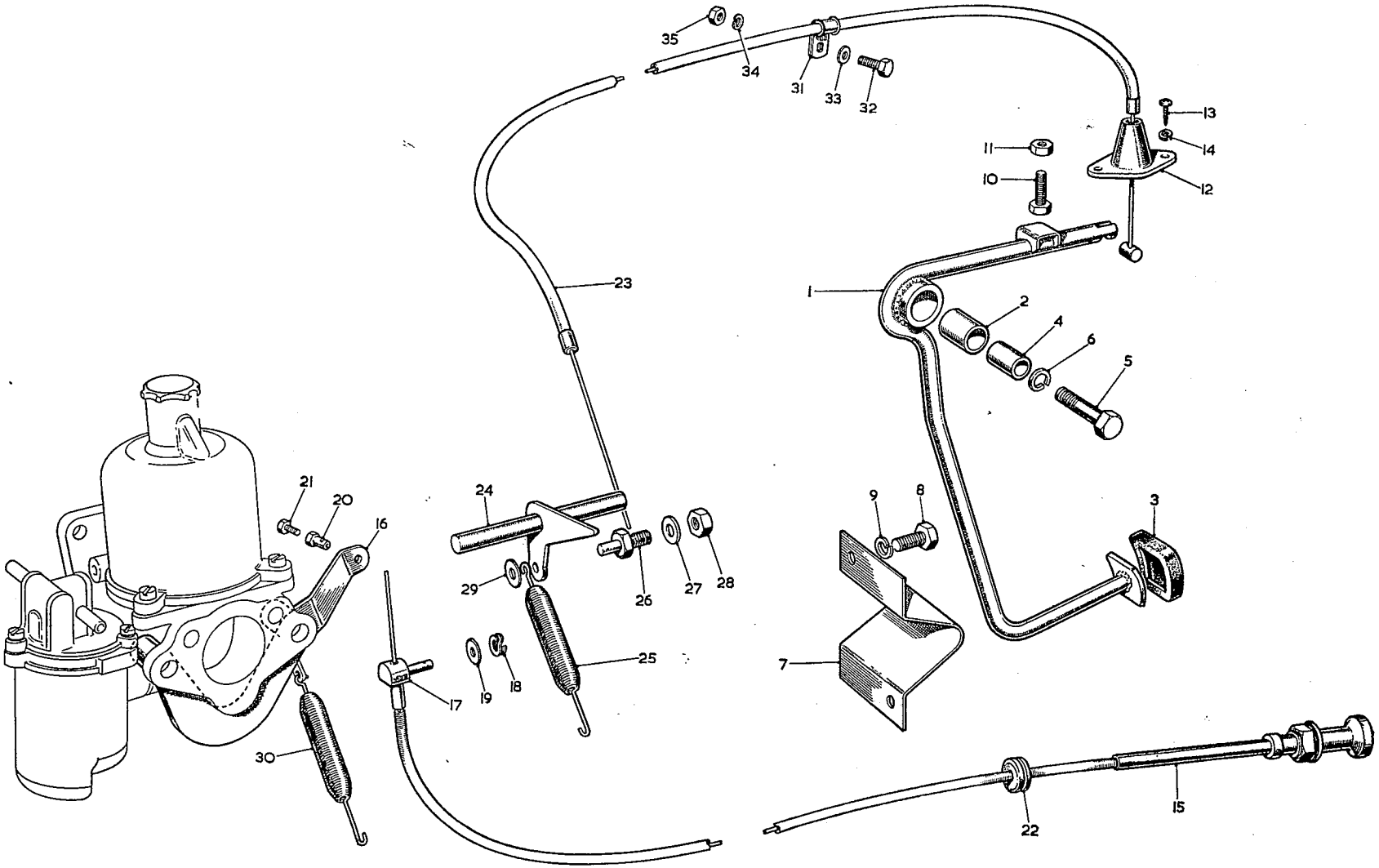

A 8800

To face page A.17

SERVICE PARTS LIST

Item No.	DESCRIPTION	Commencing (C) GHN3/101 Part Number	Illus. No.	Qty. per Veh.	MODIFICATIONS New Part Number	MODIFICATIONS Change Point	REMARKS
	ENGINE CONTROLS						
1	**Pedal assembly—accelerator** ..... **RHD**	**AHH6497**	1	1			
2	Bush	AHH5301	2	1			
3	**Pedal assembly—accelerator** ..... **LHD**	**AHH6501**		1			
4	Bush	AHH5301		1			
5	Pad—pedal (rubber)	ACA5321	3	1			
6	Tube—distance—pedal to mounting bracket	AHH6504	4	1			
7	Bolt	HBZ0511	5	1			
8	Washer—spring	LWZ205	6	1			
9	Stop—accelerator pedal ..... **RHD**	AHH6503	7	1			
10	Stop—accelerator pedal ..... **LHD**	AHH6494		1			
11	Screw—stop to pedal box	HZS0405	8	2			
12	Washer—spring	LWZ204	9	2			
13	Screw—pedal return stop to bulkhead	HZS0408	10	1			
14	Nut—screw	FNZ104	11	1			
15	Guide—accelerator cable	AHH5308	12	1			
16	Screw—guide to bulkhead	PMZ0307	13	2			
17	Washer—spring	LWZ203	14	2			
18	**Cable assembly—choke control**	**AHH6725**	15	1			
19	Bracket—choke control	AHH6731	16	1			
20	Abutment—choke control cable	AHH6734	17	1			
21	Washer—spring (double coil)	AJD7712	18	1			
22	Washer—plain	AJD7042	19	1			
23	Pin—lever—clamping cable to choke control bracket	AHA6367	20	1			
24	Screw—lever pin	ACA5453	21	1			
25	Grommet—cable	RFR103	22	1			
26	Cable—accelerator ..... **RHD**	AHH6726	23	1			
27	Cable—accelerator ..... **LHD**	AHH6727		1			
28	Lever and spindle—accelerator	12H715	24	1			
29	Spring—accelerator return	AEC2075	25	1			
30	Pin—accelerator lever	ACC5062	26	1			
31	Washer—plain	PWZ203	27	1			
32	Nut—accelerator cable to pin	FNZ104	28	1			
33	Washer—plain	PWZ204	29	1			
34	Spring—choke lever return	AEC2075	30	2			
35	Clip—accelerator cable	PCR0307	31	1			
36	Screw—clip to master cylinder box ..... **RHD**	PMZ0307	32	1			
37	Washer—plain—screw	PWZ103	33	1			
38	Washer—spring—screw	LWZ103	34	1			
39	Nut—screw	FNZ103	35	1			

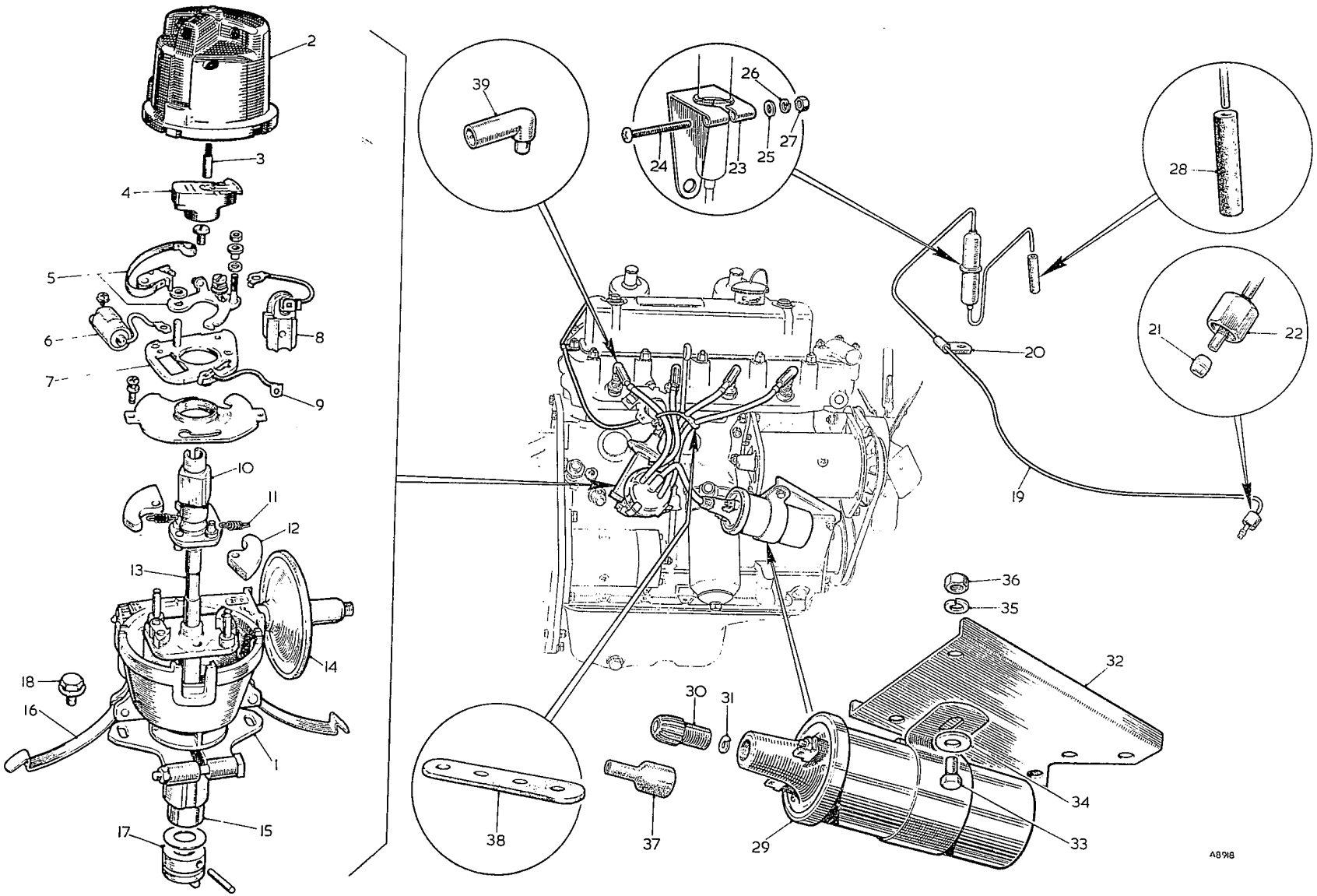

To face page B.1

Item No.	DESCRIPTION	Commencing (E) 18G/101 Part Number	Illus. No.	Qty. per Veh.	MODIFICATIONS New Part Number	MODIFICATIONS Change Point	REMARKS
	IGNITION EQUIPMENT						
	DISTRIBUTOR						
1	**Distributor**	12H792		1			
	VACUUM CONTROL						
2	Pipe—ignition control	12H733		1			
3	Clip	12H90		1			
4	Olive—carburetter end	6K649		1			
5	Nut—carburetter end	2A459		1			
6	Olive—distributor end	6K649		1			
7	Nut—distributor end	6K650		1			
8	Clip—fuel trap mounting	1H841		1			
9	Bolt—clip	PMZ0216		1			
10	Washer—plain—bolt	PWZ102		1			
11	Washer—spring—bolt	LWZ302		1			
12	Nut—bolt	CNZ102		1			
13	Connection—carburetter end (rubber)	ACH9041		1			

Item No.	DESCRIPTION	Commencing (E) 18G/101 Part Number	Illus. No.	Qty. per Veh.	MODIFICATIONS New Part Number	MODIFICATIONS Change Point	REMARKS
	IGNITION COIL						
1	**Coil—ignition**	**BGA4309**		1			
2	Nut—terminal	3H2695		1			
3	Washer	3H2696		1			
4	Bracket—coil mounting	AHH6857		1			
5	Screw—coil to bracket	HZS0405		2			
6	Washer—plain—screw	PWZ204		2			
7	Washer—spring—screw	LWZ204		2			
8	Nut—screw	FNZ104		2			
	H.T. CABLES						
9	Cable—H.T.—No. 1 13″ (33·02 cm.)	45223		A/R			Supplied only in 100-ft. (30·4 m.) rolls
10	Cable—H.T.—No. 2 10½″ (26·67 cm.)	45223		A/R			
11	Cable—H.T.—No. 3 7½″ (19·05 cm.)	45223		A/R			
12	Cable—H.T.—No. 4 9″ (22·86 cm.)	45223		A/R			
13	Cable—coil to distributor 10″ (25·40 cm.)	45223		A/R			
14	Sleeve—cable—H.T. at coil	8G536		1			
15	4-way spacer—H.T. cables	1G2673		1			
16	Suppressor—ignition cable	3H1422		4			
17	Sleeve—cable identity—No. 1	2H4243		1			
18	Sleeve—cable identity—No. 2	2H4244		1			
19	Sleeve—cable identity—No. 3	2H4245		1			
20	Sleeve—cable identity—No. 4	2H4246		1			

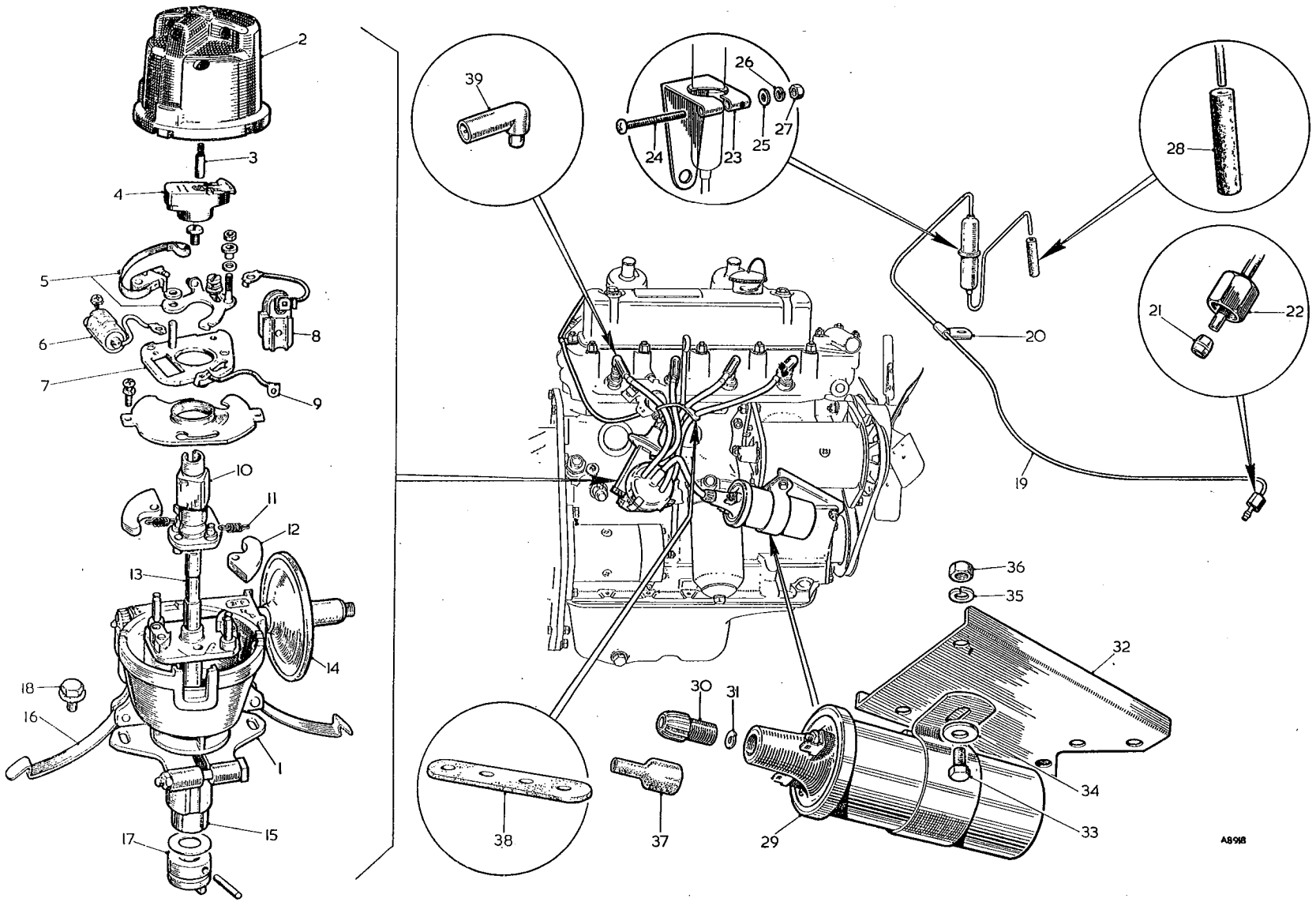

To face page B.2

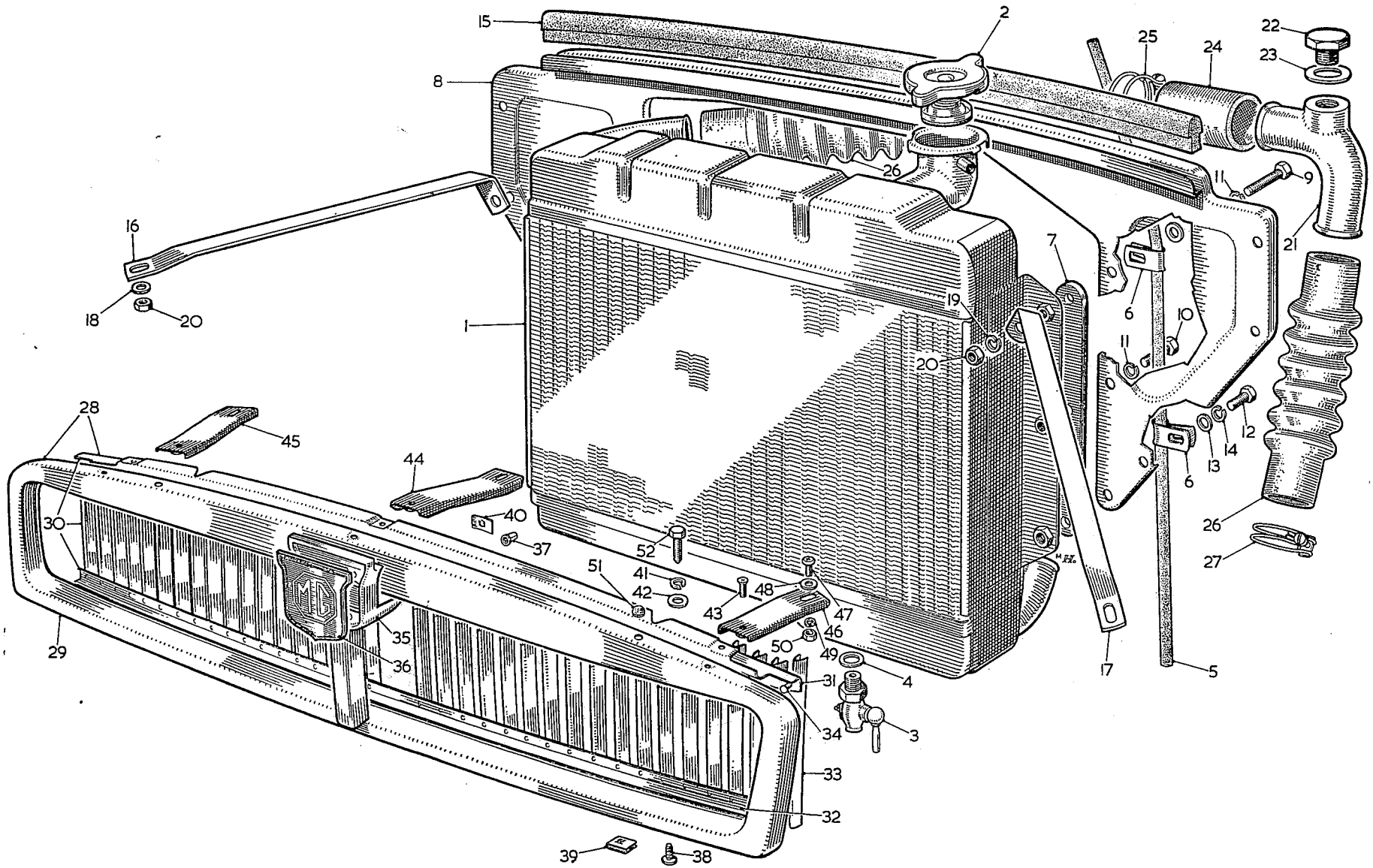

To face page C.1

SERVICE PARTS LIST

COOLING SYSTEM

Item No.	DESCRIPTION	Commencing (C) GHN3/101 Part Number	Illus. No.	Qty. per Veh.	MODIFICATIONS New Part Number	MODIFICATIONS Change Point	REMARKS
1	**Core assembly—radiator**	**ARH143**	1	1			
2	Cap—filler	ARH1541	2	1			
3	Tap—drain	ARH1050	3	1			
4	Washer—tap	ARH517	4	1			
5	Tube—drain	ARA922	5	1			
6	Clip—drain tube	PCR0611	6	2			
7	Packing	AHH6320	7	2			
8	Diaphragm—radiator	HZA457	8	1			
9	Screw—long—radiator to diaphragm	HZS0510	9	2			
10	Screw—short—radiator to diaphragm	HZS0505	10	4			
11	Washer—spring—screw	LWZ205	11	6			
12	Screw—diaphragm to body	HZS0505	12	8			
13	Washer—plain—screw	PWZ105	13	8			
14	Washer—spring—screw	LWZ205	14	8			
15	Rubber—radiator air seal	AHH6076	15	1			
16	Tie—radiator—RH	AHH6321	16	1			
17	Tie—radiator—LH	AHH6322	17	1			
18	Washer—plain—radiator tie	PWZ105	18	2			
19	Washer—spring—radiator tie	LWZ205	19	4			
20	Nut—tie	FNZ105	20	4			
21	Pipe—water pump connector	ACH5031	21	1			] Not required when heater is fitted
22	Plug—connector pipe	AEK122	22	1			
23	Washer—plug	AEK123	23	1			
24	**Hose—connector**	**ACH5032**	24	1			
25	Clip—hose	HCS1217	25	2			
26	**Hose—top and bottom**	**AHH5143**	26	2			
27	Clip—hose	HCS1217	27	4			
28	**Case and grille assembly—radiator**	**ARH155**	28	1			
29	**Case assembly**	**ARH1790**	29	1			
30	**Grille assembly**	**ARH1801**	30	1			
31	Bar—grille fixing—top	ARH1795	31	1			
32	Bar—grille fixing—bottom	ARH1797	32	1			
33	Slats—grille	ARH1799	33	36			
34	Rivet—slat fixing	ARO9399	34	72			
35	Bar and badge housing—centre	ARH1800	35	1			
36	Badge	ARA1211	36	1			
37	Fix—blind badge	ARA1238	37	4			
38	Screw—grille to case	ARH649	38	4			
39	Nut—spring	PFS410	39	4			
40	Fix—push-on—badge housing to case	PFS106	40	1			

Item No.	DESCRIPTION	Commencing (C) GHN3/101 Part Number	Illus. No.	Qty. per Veh.	MODIFICATIONS New Part Number	MODIFICATIONS Change Point	REMARKS
	Cooling System—*continued*						
1	Screw—grille to radiator duct panel	HZS0404	40	3			
2	Washer—spring—screw	LWZ204	41	3			
3	Washer—plain—screw	PWZ104	42	3			
4	Screw—grille to steady bracket	RMP0306	43	3			
5	Bracket—steady grille centre assembly	HZA489	44	1			
6	Bracket—steady grille side assembly—RH	HZA490	45	1			
7	Bracket—steady grille side assembly—LH	HZA491	46	1			
8	Screw—steady bracket to bonnet lock platform	PMZ0308	47	3			
9	Washer—plain	PWZ103	48	3			
10	Washer—spring	LWZ203	49	3			
11	Nut—screw	FNZ103	50	3			
12	Buffer—grille top rail	ADA803	51	2			

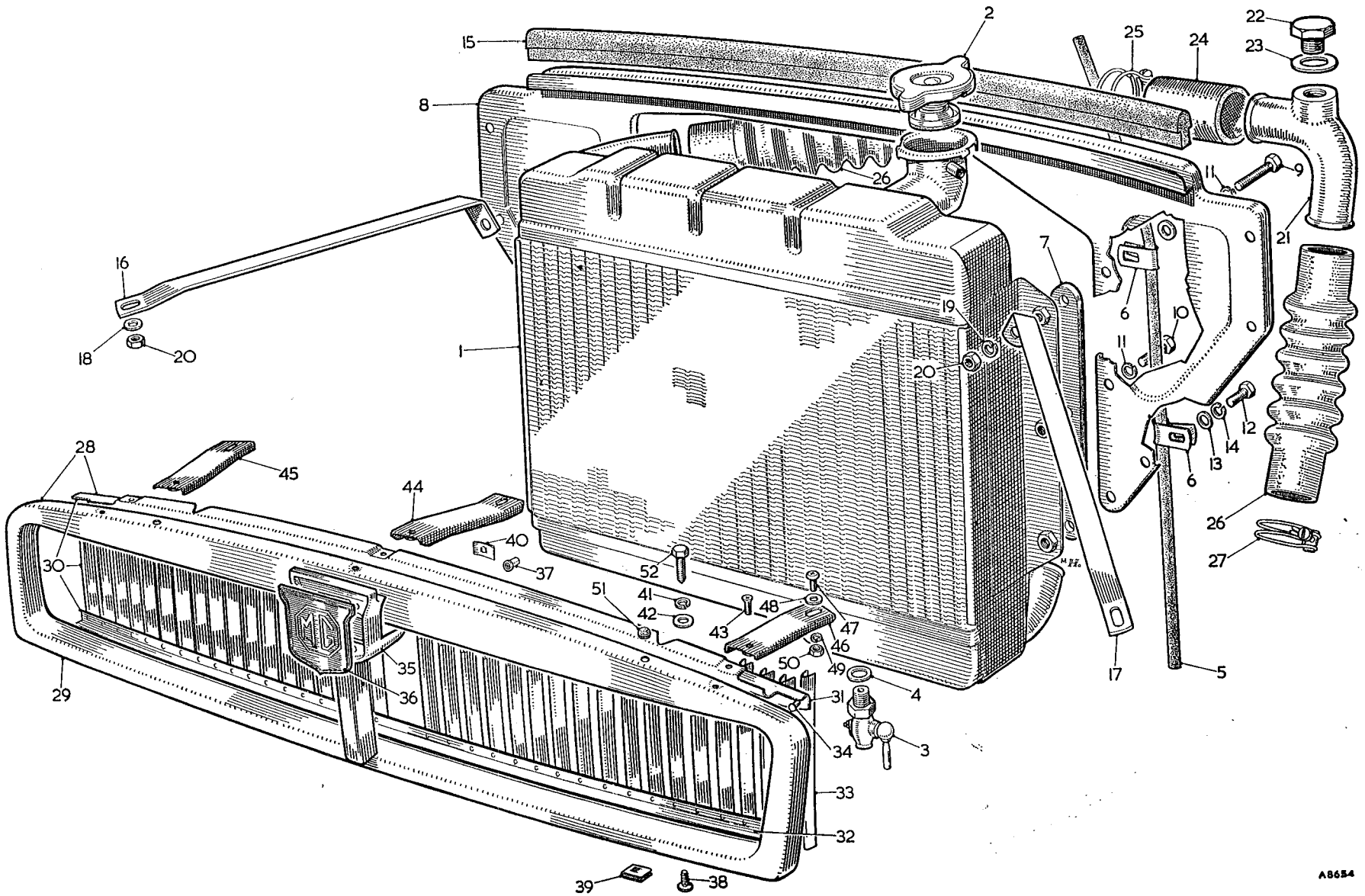

To face page C.2

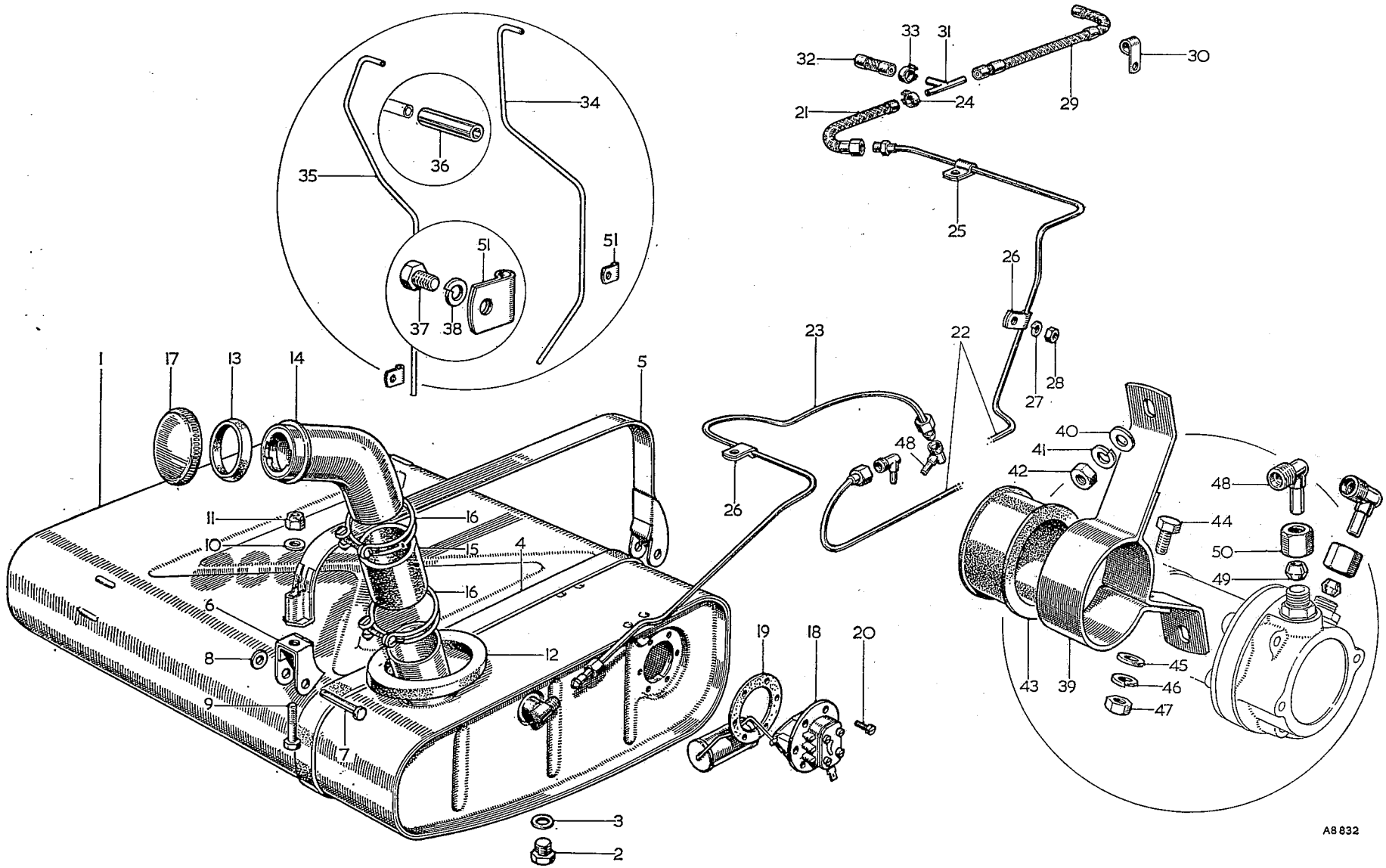
1
17
13
14
5
11
10
16
15
4
16
6
8
12
9
7
3
2
34
35
36
51
51
37
38
33
31
32
30
24
29
21
25
26
27
28
23
22
26
48
40
41
42
48
44
50
49
45
46
47
43
39
19
18
20
A8832

FUEL SYSTEM

FUEL TANK

Item No.	DESCRIPTION	Commencing (C) GHN3/101 Part Number	Illus. No.	Qty. per Veh.	MODIFICATIONS New Part Number	MODIFICATIONS Change Point	REMARKS
1	**Tank—fuel**	**ARH176**	1	1			
2	Plug—drain	ARO4566	2	1			
3	Washer—plug	ARH673	3	1			
4	Packing strip—tank (rubber)	AHH6252	4	2			
5	Strap—tank and mounting	AHH6253	5	2			
6	Hanger and stiffener—rear	AHH6257	6	2			
7	Pin—clevis	CLZ0427	7	4			
8	Washer—plain	PWZ104	8	4			
9	Bolt	HBZ0418	9	2			
10	Washer—plain	PWZ104	10	2			
11	Nut	LNZ104	11	2			
12	Seal—tank to trunk floor (rubber)	AHH6280	12	1			
13	Ferrule—filler neck (rubber)	AHH6268	13	1			
14	Tube—fuel filler	AHH6281	14	1			
15	Hose—filler connection	11B2011	15	1			
16	Clip—hose	8G505	16	2			
17	Cap—filler	8G654	17	1			
18	Unit—tank	BHA4292	18	1			
19	Gasket—unit tank	37H1242	19	1			
20	Screw—tank unit to tank	ACA5127	20	6			

FUEL PIPES

Item No.	DESCRIPTION	Commencing (C) GHN3/101 Part Number	Illus. No.	Qty. per Veh.	MODIFICATIONS New Part Number	MODIFICATIONS Change Point	REMARKS
21	Pipe—flexible—main pipe to carburetters	AHH6707	21	1			
22	Pipe—pump to flexible pipe	AHH6705	22	1			
23	Pipe—pump to tank	AHH6703	23	1			
24	Clip—flexible pipe to carburetter 'T'-piece	ACH5854	24	1			
25	Clip—pipe to bulkhead	PCR0507	25	1			
26	Clip—pipe to pedal box panel and boot floor	PCR0509	26	2			
27	Washer—spring	LWZ204	27	2			
28	Nut—clip	FNZ104	28	2			
29	Pipe—flexible—carburetter to carburetter	12H722	29	1			
30	Clip—pipe to carburetter flange	AEA589	30	2			
31	'T'-piece—supply pipe to flexible pipe	12H723	31	1			
32	Connection—'T'-piece to rear carburetter	BRT2404	32	1			
33	Clip—connection	ACH5854	33	3			

Item No.	DESCRIPTION	Commencing (C) GHN3/101 Part Number	Illus. No.	Qty. per Veh.	MODIFICATIONS New Part Number	MODIFICATIONS Change Point	REMARKS
	OVERFLOW PIPES						
1	Pipe—overflow—front carburetter	12H725	34	1			
2	Pipe—overflow—rear carburetter	12H727	35	1			
3	Connector—overflow pipe	12H802	36	2			
4	Screw—rear overflow pipe to crankcase	HZS0504	37	1			
5	Washer—spring	LWZ305	38	1			
6	Ring—retaining—overflow pipe	12H860		4			
	FUEL PUMP FITTINGS						
7	Bracket—fuel pump	AHH6709	39	1			
8	Washer—plain	PWZ104	40	2			
9	Washer—spring	LWZ204	41	2			
10	Nut—bracket to heelboard	FNZ104	42	2			
11	Mounting—fuel pump (rubber)	AHH6708	43	1			
12	Screw—pump to bracket	HZS0405	44	1			
13	Washer—plain	PWZ104	45	1			
14	Washer—spring	LWZ204	46	1			
15	Nut—screw	FNZ104	47	1			
16	Elbow—fuel pump	127464	48	2			
17	Olive—elbow	2718	49	2			
18	Nut—elbow	2715	50	2			

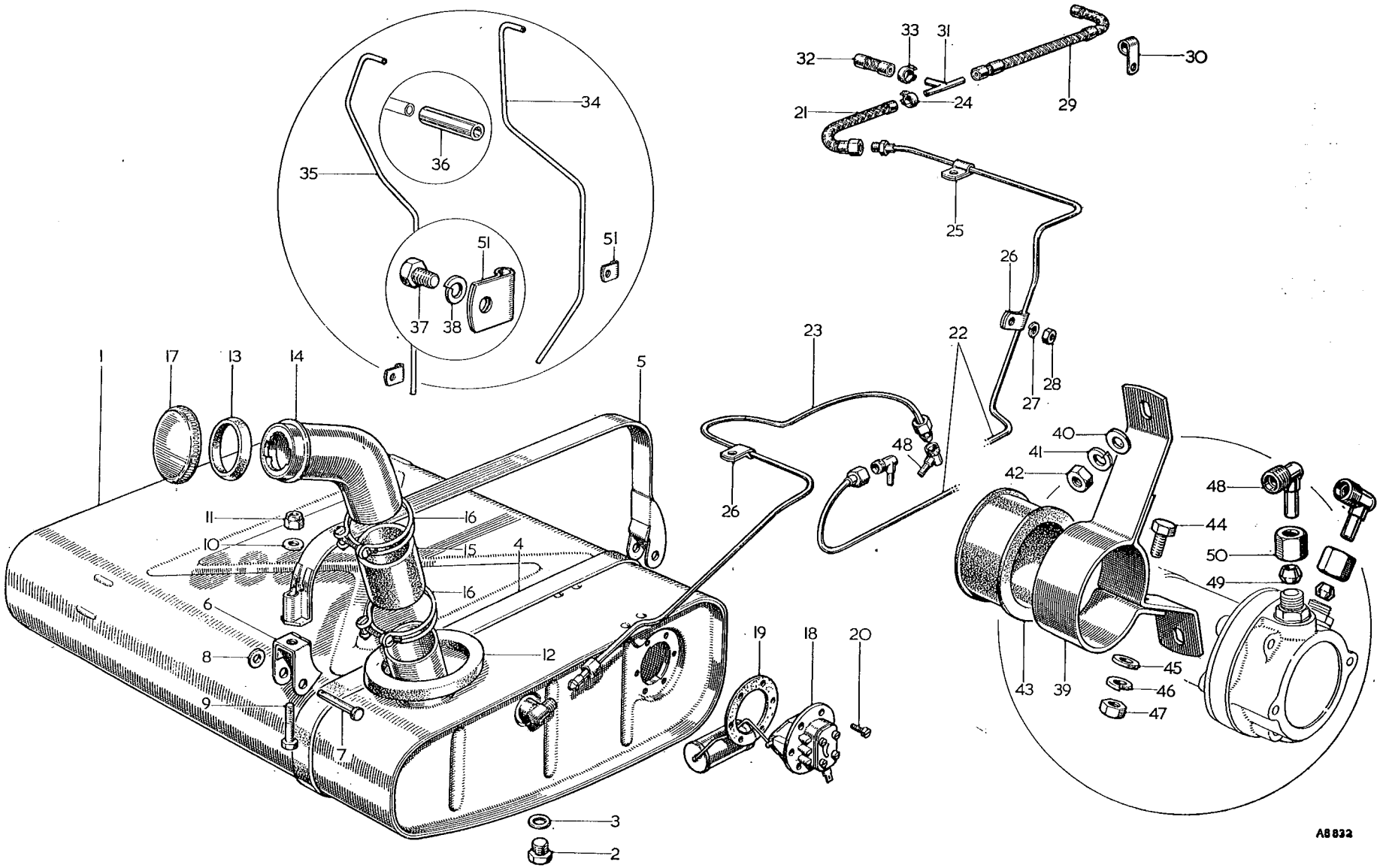

To face page D.2

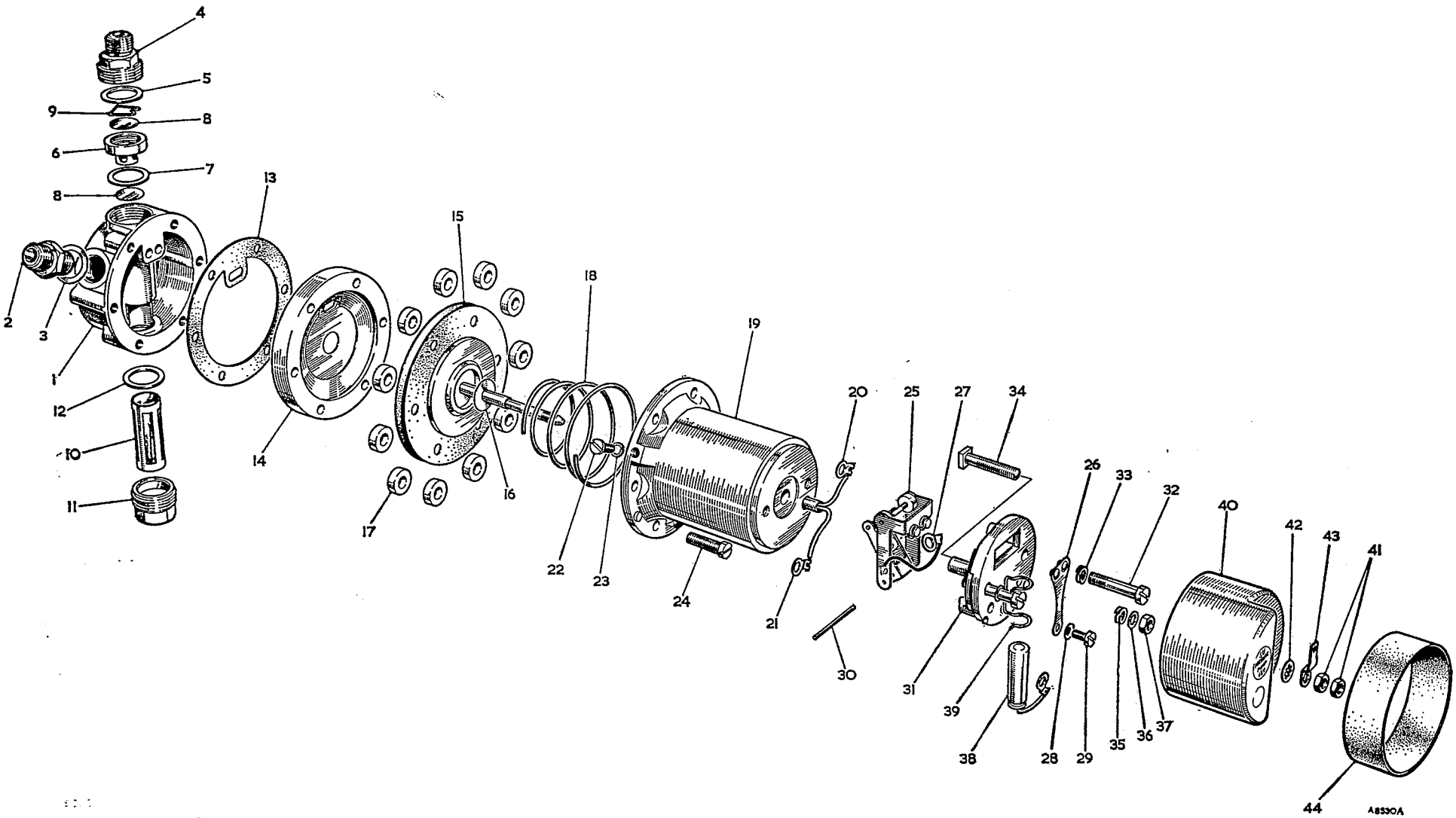

To face page D.3

Item No.	DESCRIPTION	Commencing (C) GHN3/101 Part Number	Illus. No.	Qty. per Veh.	MODIFICATIONS New Part Number	MODIFICATIONS Change Point	REMARKS
	FUEL PUMP						
1	**Pump assembly**	**AUA150**		1			
2	Body	AUA4080	1	1			
3	Union—inlet	AUA887	2	1			
4	Washer—union	AUA1405	3	1			
5	Union—outlet	AUA1422	4	1			
6	Washer—union	AUA1442	5	1			
7	Cage—valve	AUA1822	6	1			
8	Washer—cage	AUA1479	7	1			
9	Disc—valve	AUA839	8	2			
10	Circlip—valve cage	AUA840	9	1			
11	Filter	AUA1464	10	1			
12	Plug—filter	AUA1421	11	1			
13	Washer—plug	AUA1442	12	1			
14	Washer—joint—body to plate	AUA4082	13	1			
15	Plate—body	AUA4081	14	1			
16	**Diaphragm assembly**	**AUB6004**	15	1			**Alternatives**
		AUB6015		1			Use with AUB6015 only
17	Washer—impact	AUA1447	16	1			
18	Roller	AUA1433	17	11			
19	Spring—diaphragm	AUB521	18	1			
20	**Housing—coil**	**AUB6007**	19	1			
21	Tag—5 B.A. terminal	AUA1455	20	1			
22	Tag—2 B.A. terminal	AUA1456	21	1			
23	Screw—earth	AUA699	22	1			
24	Washer—spring—screw	AUA585	23	1			
25	Screw—coil housing to body	AUA4083	24	6			
26	**Rocker and blade**	**AUA6021**	25	1			
27	Blade	AUA6036	26	1			
28	Tag—2 B.A. terminal	AUA1456	27	1			
29	Washer—dished	AUA566	28	1			
30	Screw—blade	AUA565	29	1			
31	Spindle—contact breaker	AUA1435	30	1			
32	Pedestal	AUA6034	31	1			
33	Screw—pedestal to coil housing	AUA1459	32	2			
34	Washer—spring—screw	AUA1863	33	2			
35	Screw for terminal	AUA1468	34	1			
36	Washer—spring—screw	AUA1863	35	1			
37	Washer—lead	AUA1662	36	1			
38	Nut—terminal	AUA1661	37	1			
39	Condenser	AUA5060	38	1			
40	Clip—condenser	AUA5059	39	1			
41	Cover—end	AUA5078	40	1			
42	Nut—cover	AUA878	41	2			
43	Washer—shakeproof	AUA4643	42	1			
44	Connector—Lucar	AUA692	43	1			
45	Sleeve (rubber)	AUA504	44	1			

Item No.	DESCRIPTION	Commencing (C) GHN3/101 Part Number	Illus. No.	Qty. per Veh.	MODIFICATIONS New Part Number	MODIFICATIONS Change Point	REMARKS
	CARBURETTER						
1	**Carburetter installation**	**AUD52**		1			
2	**Carburetter assembly—front**	**AUC9186**		1			
3	**Carburetter assembly—rear**	**AUC9187**		1			
4	Body—front carburetter	AUC8723	1	1			
5	Body—rear carburetter	AUC8734	2	1			
6	Pin—piston lifting	AUC1249	3	2			
7	Spring—pin	AUC1151	4	2			
8	Circlip—pin	AUC1250	5	2			
9	**Chamber and piston assembly**	**AUC8070**	6	2			
10	Screw—needle locking	AUC2057	7	2			
11	**Cap and damper assembly**	**AUC8114**	8	2			
12	Washer—cap (fibre)	AUC4900	9	2			
13	Spring—piston (red)	AUC4387	10	2			
14	Screw—chamber to body	AUC2175	11	6			
15	**Jet assembly—front carburetter**	**AUD9072**	12	1			
16	**Jet assembly—rear carburetter**	**AUD9073**	13	1			
17	Bearing—jet	AUC8460	14	2			
18	Washer—jet bearing (brass)	AUC8478	15	2			
19	Screw—jet locking	AUC2002	16	2			
20	Spring—jet locking	AUC2114	17	2			
21	Screw—jet adjusting	AUC8461	18	2			
22	Needle						
23	**Needle—No. 6 standard—jet**	**AUD1005**	19	2			
24	Needle						
25	Chamber—float	AUC1310	20	2			
26	Washer—support	AUC1329	21	2			
27	Grommet—front carburetter (rubber)	AUC1366	22	1			
28	Grommet—rear carburetter (rubber)	AUC1367	23	1			
29	Washer (rubber)	AUC1318	24	2			
30	Washer—plain	AUC1317	25	2			
31	Bolt—float-chamber fixing	AUC1319	26	2			
32	**Float assembly**	**AUC8667**	27	2			
33	Pin—hinged lever	AUC1152	28	2			
34	Lid—float-chamber—front carburetter	AUD9085	29	1			
35	Lid—float-chamber—rear carburetter	AUD9086	30	1			
36	Washer—lid	AUC8459	31	2			
37	**Needle and seat assembly**	**AUC8170**	32	2			
38	Screw—lid	AUC2175	33	6			
39	Washer—spring—screw	AUC2246	34	6			
40	Spindle—throttle	AUC1302	35	2			
41	Disc—throttle	AUC3116	36	2			
42	Screw—disc	AUC1358	37	4			
43	Lever—throttle return—front carburetter	AUC1145	38	1			
44	Lever—throttle return—rear carburetter	AUD2101	39	1			SE ENVOIRE PAGE 732

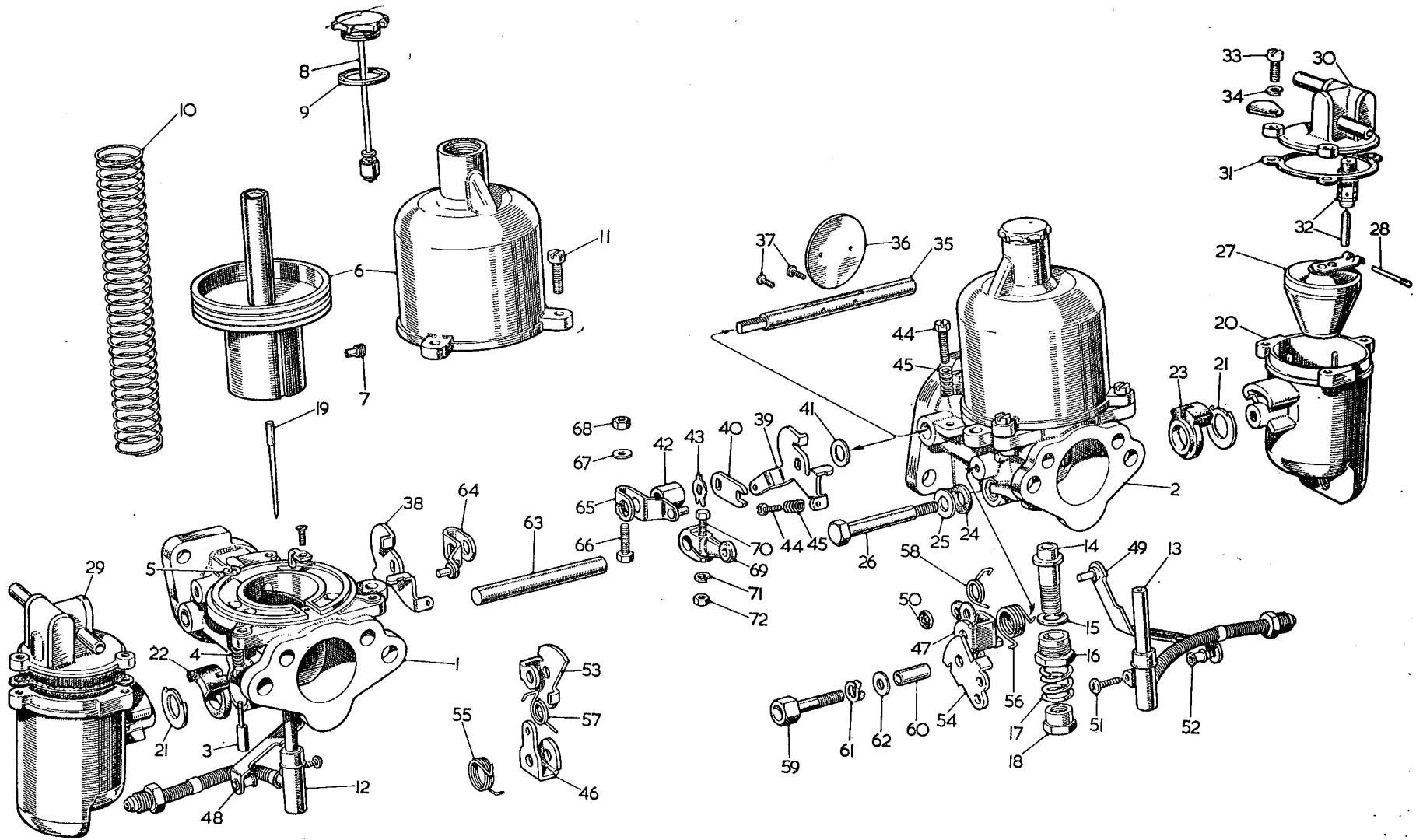

To face page D.4

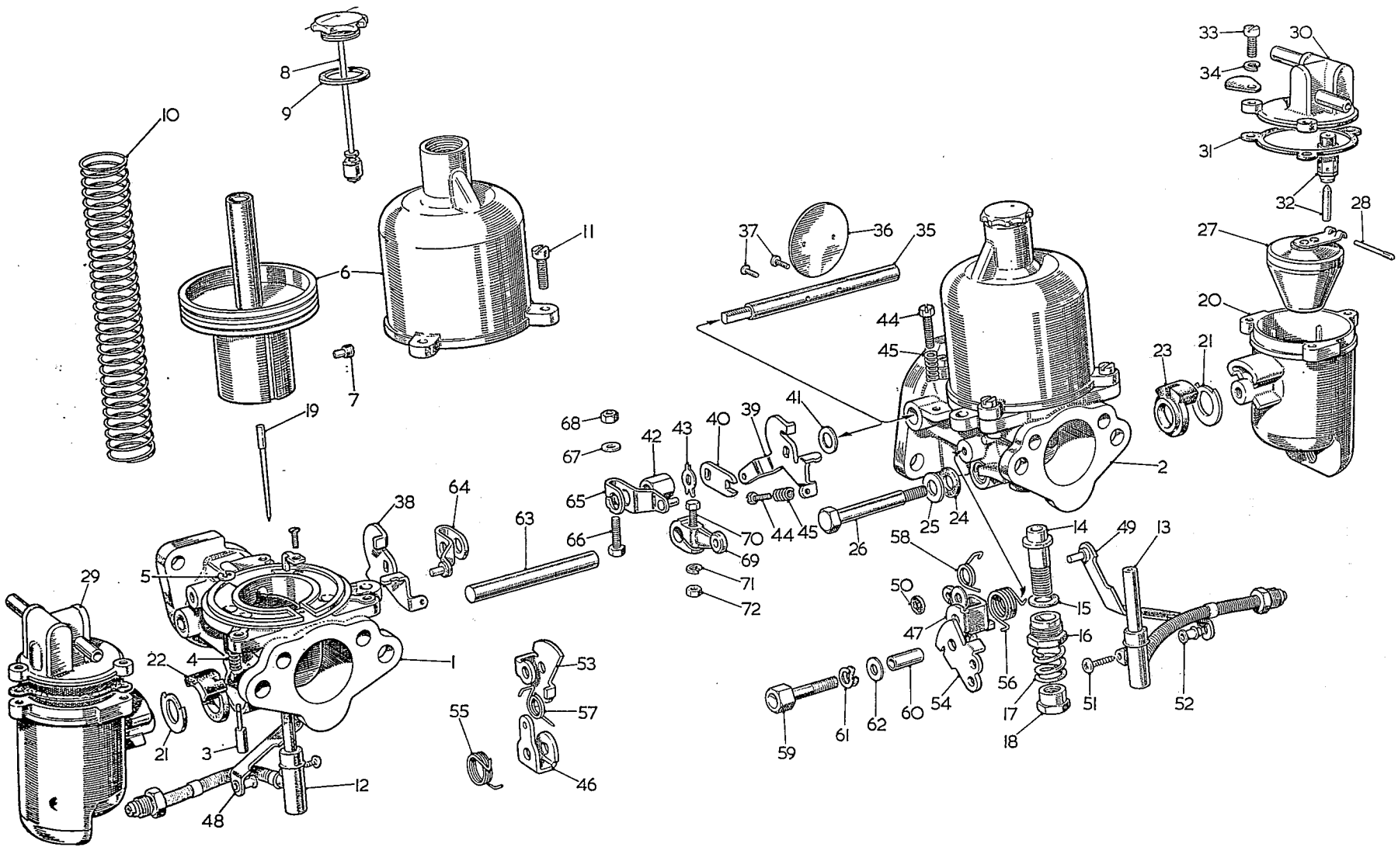

To face page D.5

Item No.	DESCRIPTION	Commencing (C) GHN3/101 Part Number	Illus. No.	Qty. per Veh.	MODIFICATIONS New Part Number	MODIFICATIONS Change Point	REMARKS
	Carburetter—*continued*						
1	Lever—lost motion	AUC1400	40	2			
2	Washer—spacing	AUC2625	41	2			
3	Nut—lever	AUC1424	42	2			
4	Washer—tab—nut	AUC1206	43	2			
5	Screw—throttle stop	AUC8483	44	4			
6	Spring—throttle stop screw	AUC2451	45	4			
7	Lever and link assembly—pick-up—front carburetter	AUD9092	46	1			
8	Lever and link assembly—pick-up—rear carburetter	AUD9093	47	1			
9	Lever—pick-up—front carburetter	AUC8457		1			No longer available. Use AUD9092 and AUD9093
10	Lever—pick-up—rear carburetter	AUC1374		1			
11	Link—front carburetter	AUD2176		1			
12	Link—rear carburetter	AUD2177		1			
13	Washer—Starlock—link	AUC5002		2			
14	Bush	AUD2173		2			
15	Screw—link to jet	PTZ605	51	2			
16	Lever—cam—front carburetter	AUD2163	53	1			
17	Lever—cam—rear carburetter	AUD2164	54	1			
18	Spring—pick-up lever—front carburetter	AUC8462	55	1			
19	Spring—pick-up lever—rear carburetter	AUC1375	56	1			
20	Spring—cam lever—front carburetter	AUD2050	57	1			
21	Spring—cam lever—rear carburetter	AUD2049	58	1			
22	Bolt—pivot	AUC1426	59	2			
23	Tube—pivot bolt	AUC8473	60	2			
24	Washer—spring—pivot bolt	AUD2076	61	2			
25	Washer—distance	AUC5032	62	4			
26	Rod—jet connecting	AUC1462	63	1			
27	Lever and pin assembly—front carburetter	AUE86	64	2			
28	Lever and pin assembly—rear carburetter	AUE87	65	2			
29	**Lever and pin assembly—front carburetter**	**AUC8965**		2			**No longer available. Use AUE86**
30	**Lever and pin assembly—rear carburetter**	**AUD9002**		2			**No longer available. Use AUE87**
31	Bolt—lever	AUC2694	66	4			
32	Washer—bolt	AUC8396	67	4			
33	Nut—bolt	AJD8012Z	68	4			
34	Lever—choke	AUC1501	69	1			
35	Bolt—lever	AUC2694	70	1			
36	Washer—spring	AUC2246	71	1			
37	Nut—bolt	AJD8012Z	72	1			

Item No.	DESCRIPTION	Commencing (C) GHN3/101 Part Number	Illus. No.	Qty. per Veh.	MODIFICATIONS New Part Number	MODIFICATIONS Change Point	REMARKS
	HEAT SHIELD						
1	**Shield assembly—heat**	**12H719**	1	1			
2	Joint—heat shield and carburetter	AEC2183	2	6			
3	Distance piece—carburetter to heat shield	12H712	3	2			] Not required when induction heater fitted
4	Distance piece—carburetter	1H1257		2			When induction heater fitted
	INDUCTION HEATER						
5	Heater—induction	AUD9140		2			
	AIR CLEANER						
6	**Cleaner—air—front**	**AHH6447**		1			
7	**Cleaner—air—rear**	**AHH6448**		1			
8	Bolt	17H2541	4	4			
9	Washer—plain	PWZ205	5	4			
10	Grommet	17H2540	6	4			
11	Spacer	17H2542	7	4			
12	Element	17H2538	8	4			
13	Plate assembly—base—front cleaner	17H2543	9	2			
14	Plate—base—rear cleaner	17H2537	10	1			
15	Seal (rubber)	17H2544		1			
16	Casting—base	17H2545	11	2			
17	Gasket—cleaner to carburetter	ACG5184	12	2			
18	Hose—cleaner to rocker cover	AHH6464	13	2			
19	Clip—hose	ACA5290	14	1			
20	Seal—air cleaner coupling	AHH6465	15	2			
21	Plate—fixing—rear air cleaner	AHH6732	16	1			
22	Plate assembly—fixing—front air cleaner and choke control bracket	AHH6731	18	1			
			17	1			

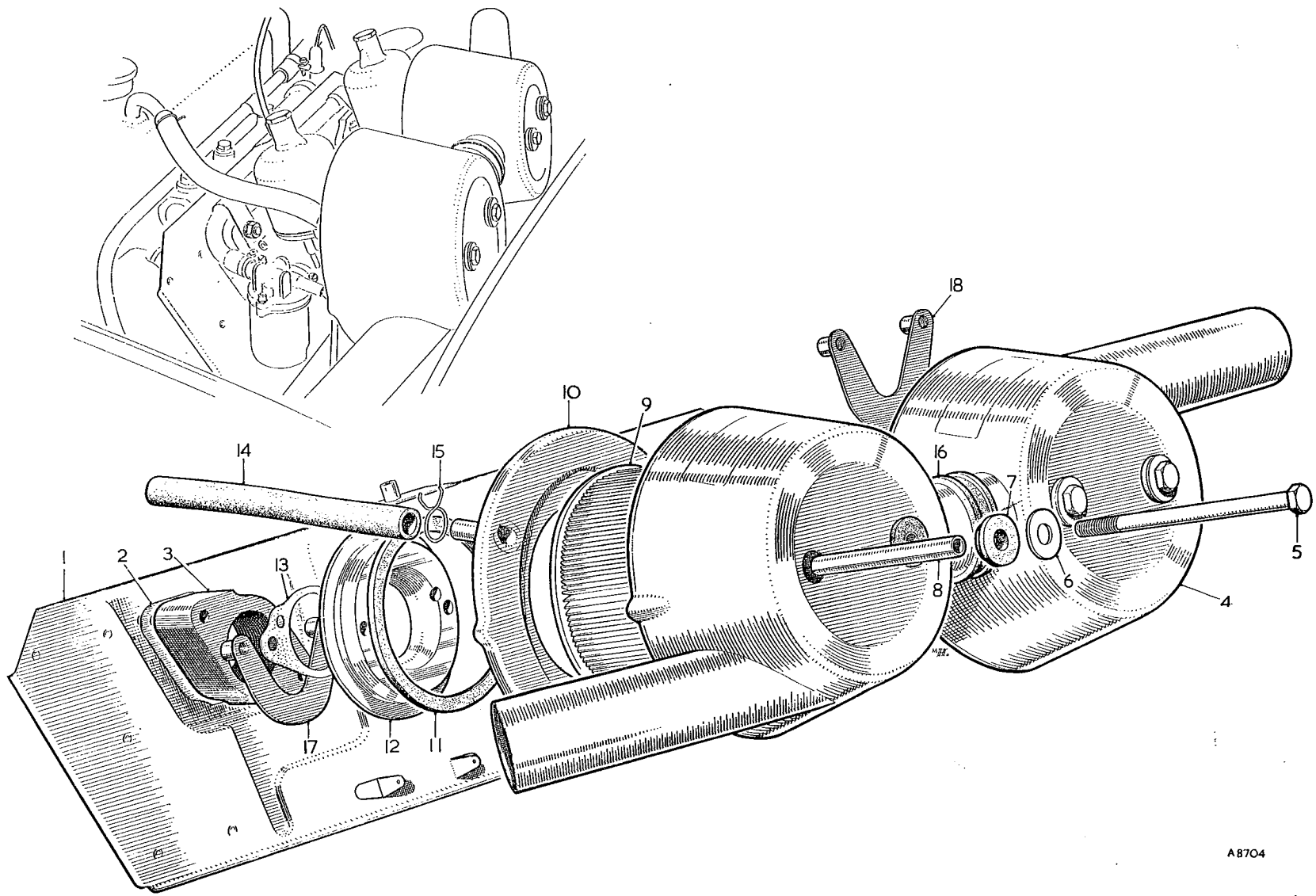

To face page D.6

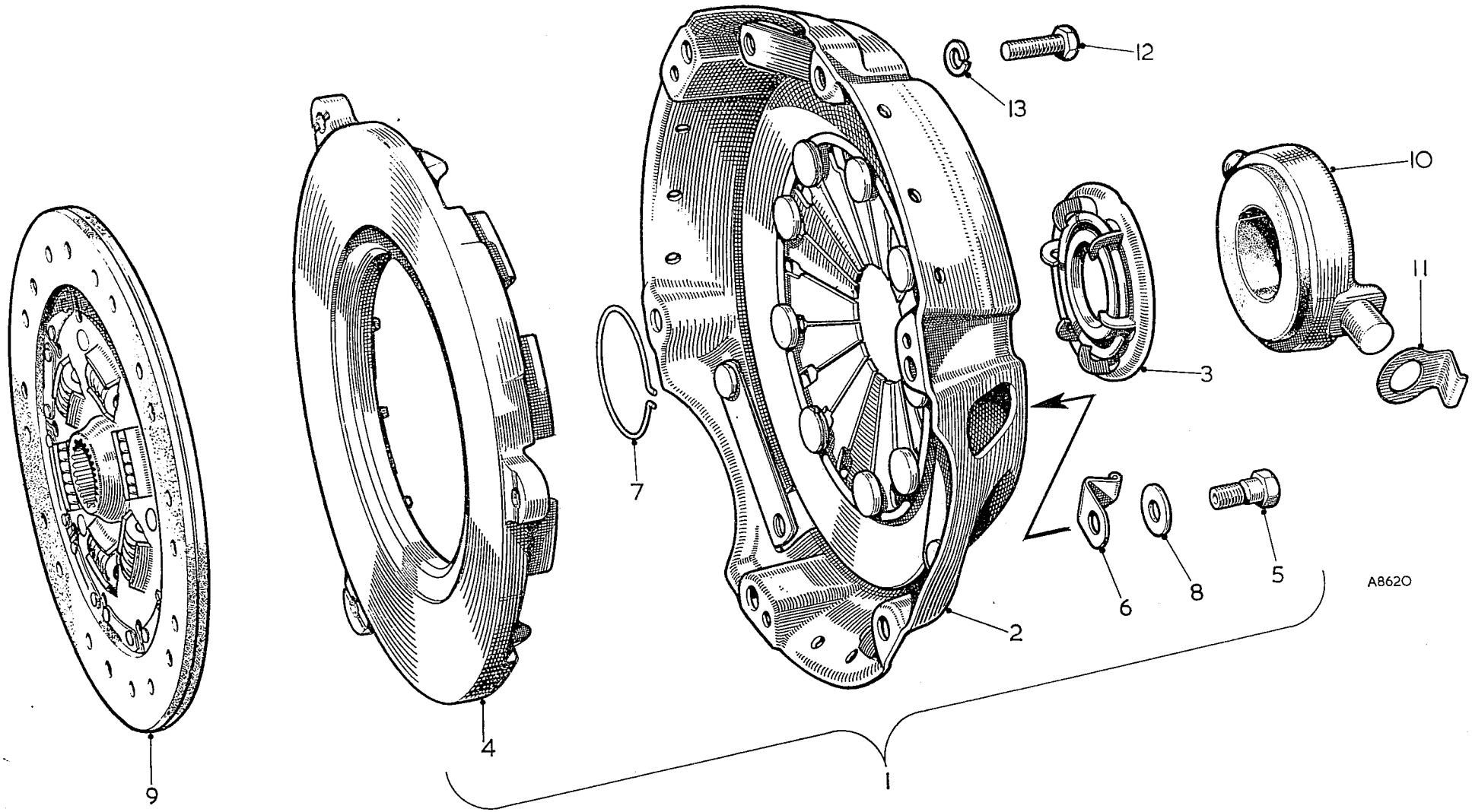

To face page E.1

CLUTCH

CLUTCH COMPONENTS

Item No.	DESCRIPTION	Commencing (E) 18G/101 Part Number	Illus. No.	Qty. per Veh.	MODIFICATIONS New Part Number	MODIFICATIONS Change Point	REMARKS
1	**Clutch assembly**	**NSP**		1	17H 8181 - 13H 2518 - 13H 1522		
2	**Cover assembly**	**13H484**	1	1			
3	Cover with straps and diaphragm spring	27H3280	2	1			
4	Plate—release—housing and thrust ring	27H3281	3	1			
5	Plate—pressure	27H3282	4	1			
6	Bolt—strap	27H3283	5	3			
7	Clip—pressure plate	27H3284	6	3			
8	Circlip—release plate	27H3285	7	1			
9	Washer—strap	7H7553	8	3			
10	**Plate assembly—driven**	**12H579**	9	1			
11	Lining and rivets	8G8348		1 set			
12	Rivet	7H3078		22			
13	**Bearing assembly—release**	**27H3286**	10	1			
14	Ring—carbon	NSP		1			
15	Retainer—bearing	22B66	11	2			
16	Screw—clutch to flywheel	HZS0507	12	6			
17	Washer—spring—screw	2K5319	13	6			

Item No.	DESCRIPTION	Commencing (C) GHN3/101 Part Number	Illus. No.	Qty. per Veh.	MODIFICATIONS New Part Number	MODIFICATIONS Change Point	REMARKS
	CLUTCH PEDAL AND LINKAGE						
1	**Pedal—clutch** ..... **RHD**	**AHH6154**	1	1			
2	**Pedal—clutch** ..... **LHD**	**AHH6505**		1			
3	Bush	185794	2	1			
4	Pad—pedal (rubber)	AHH5100	3	1			
5	Tube—distance—clutch pedal	185795	4	1			
6	Spring—pedal pull-off	130154	5	1			
7	Pin—clevis—fork end to pedal	CLZ0514	6	1			
8	Washer—plain—pin	PWZ105	7	1			
9	Bolt—fulcrum—pedal to bracket						
10	Washer—spring—bolt						
11	Nut—bolt						
12	Spacer—pedal fulcrum						See page M.1
13	Washer—plain						
	MASTER CYLINDER ASSEMBLY						
14	**Cylinder—clutch master**	**AHH6553**		1			
15	Barrel and tank	17H7836	8	1			
16	Cap—filler	17H7407	9	1			
17	Seal—cap	17H7408	10	1			
18	Boot	17H7411	11	1			
19	Circlip	17H7560	12	1			
20	Rod-push	17H7985	13	1			
21	Cup—secondary	17H7123	14	1			
22	Piston	17H7860	15	1			
23	Washer—piston	17H7984	16	1			
24	Cup—main	17H7122	17	1			
25	Retainer—spring	17H7554	18	1			
26	Spring	17H7981	19	1			
27	Screw—cylinder to box	HZS0507	20	1			
28	Screw—cylinder and stiffener to box	HZS0508	21	1			
29	Washer—spring—screw	LWZ205	22	2			
30	Nut—screw	FNZ105	23	2			
31	Pipe—master cylinder to hose ..... **RHD**	AHH6362	24	1			
32	Pipe—master cylinder to hose ..... **LHD**	ACB8754	25	1			
33	Hose—clutch	7H7857	26	1			
34	Locknut—hose	2K8686	27	1			
35	Washer—shakeproof	LWZ510	28	1			
36	Gasket—hose to pipe	3H550	29	1			

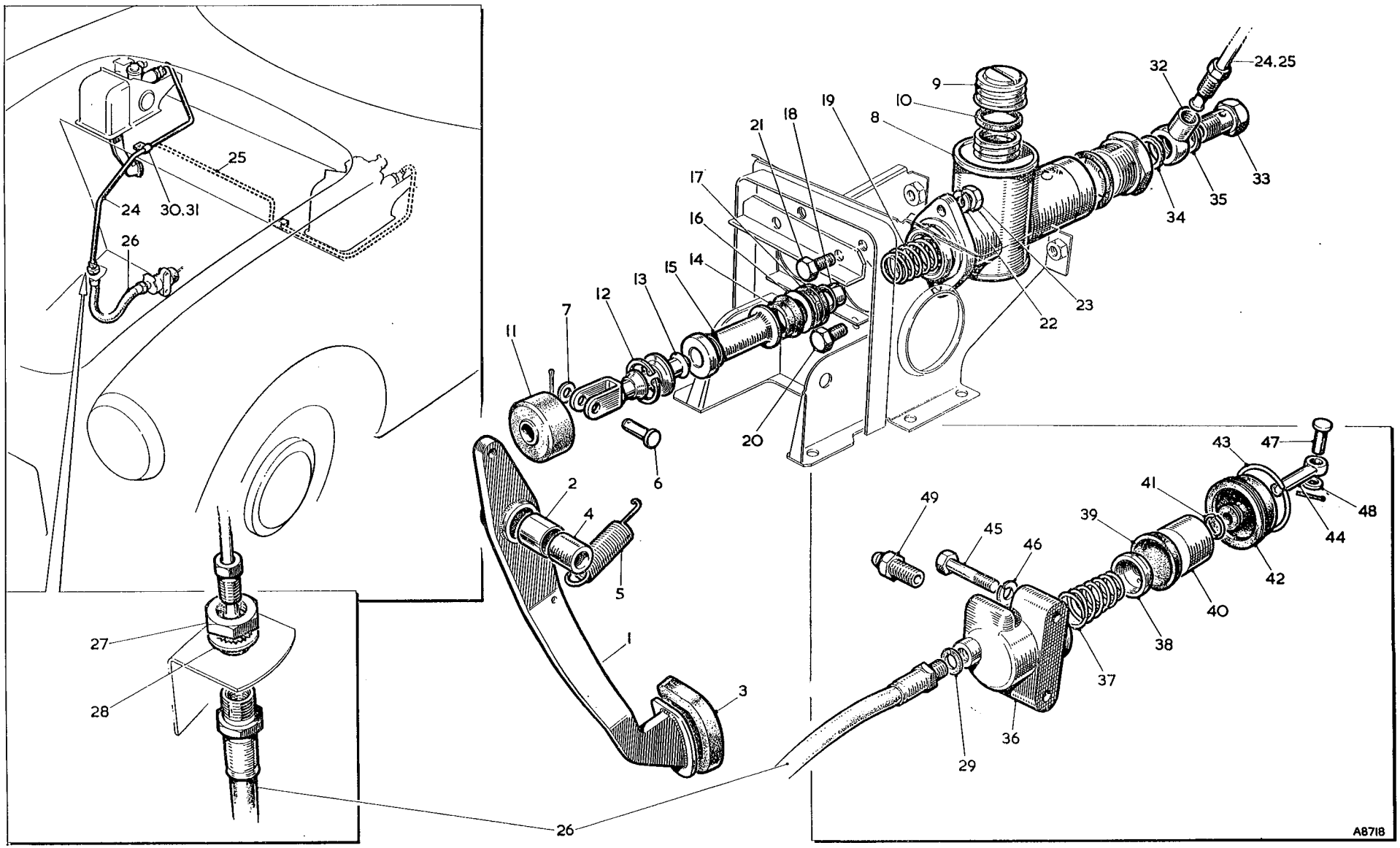

To face page E.2

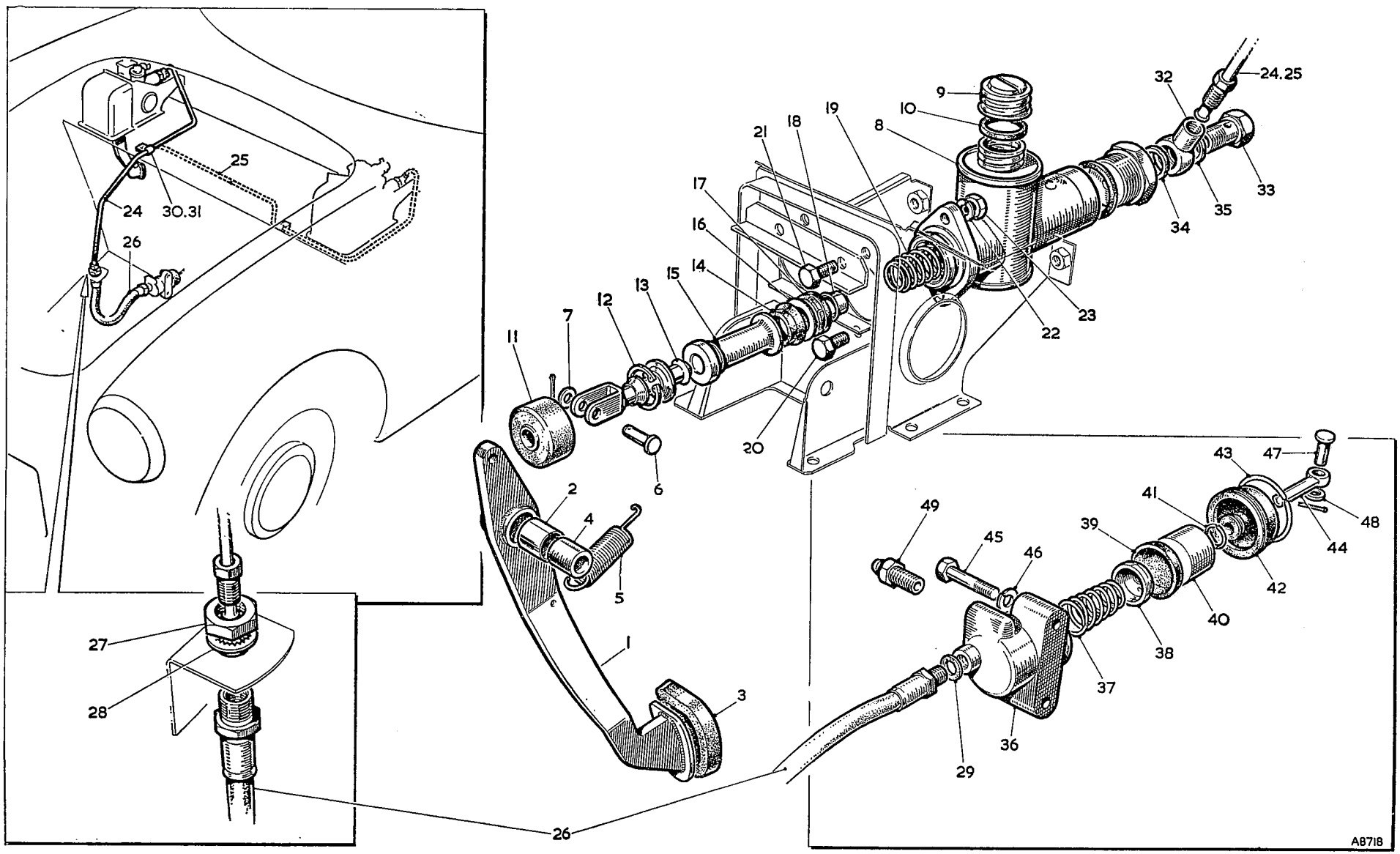

To face page E.3

Item No.	DESCRIPTION	Commencing (C) GHN3/101 Part Number	Illus. No.	Qty. per Veh.	MODIFICATIONS New Part Number	MODIFICATIONS Change Point	REMARKS
	Clutch Master Cylinder—*continued*						
1	Clip—clutch pipe to bulkhead ..... **RHD**	PCR0411	30	1			
2	Clip—clutch pipe to bulkhead ..... **LHD**	PCR0411	31	2			
3	Connection—banjo	BHA4310	32	1			
4	Bolt—banjo connection	11D5264	33	1			
5	Gasket	3H2287	34	1			
6	Gasket	3H550	35	1			
7	**Kit—master cylinder repair**	**8G8424**		1			
8	Boot			1			
9	Cup—secondary			1			
10	Washer—piston			1			
11	Cup—main			1			
	CLUTCH OPERATING CYLINDER						
12	**Cylinder assembly—clutch operating**	**17H7878**		1			
13	Body	7H7983	36	1			
14	Spring—cup filler	7H7959	37	1			
15	Filler—piston cup	7H7560	38	1			
16	Cup—piston	7H7004	39	1			
17	Piston	7H7003	40	1			
18	Clip—boot (small)	7H7958	41	1			
19	Boot	7H7957	42	1			
20	Clip—boot (large)	7H7956	43	1			
21	Rod—push	7H7954	44	1			
22	Bolt—cylinder to gearbox	HCZ0615	45	2			
23	Washer—spring—bolt	LWZ206	46	2			
24	Pin—clevis—cylinder to clutch fork	2K5622	47	1			
25	Washer—plain—pin	2K1203	48	1			
26	Screw—bleeder	3H554	49	1			
27	**Kit—clutch operating cylinder repair**	**8G8420**		1			
28	Cup—piston			1			
29	Boot			1			

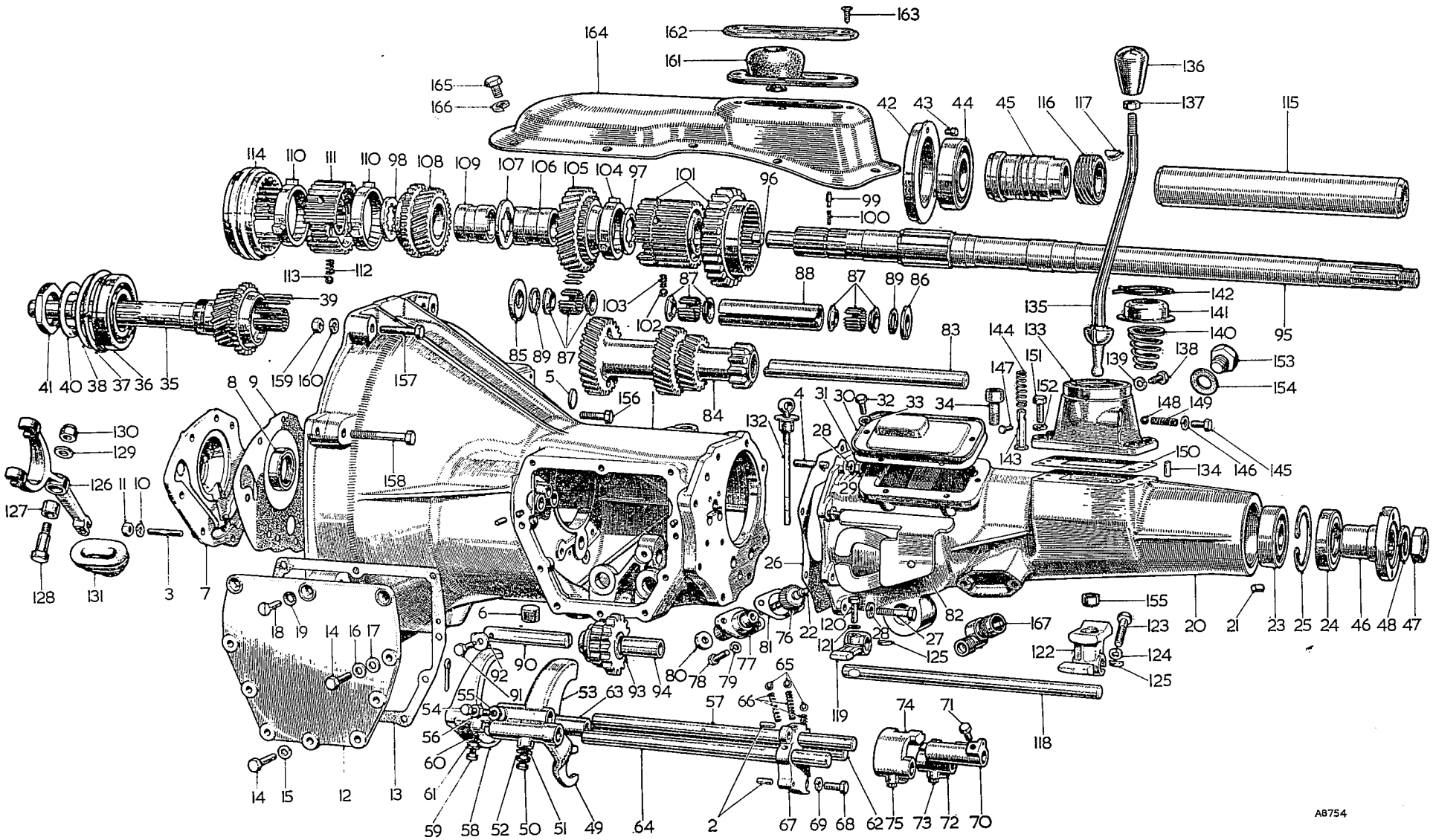

To face page F.1

GEARBOX—STANDARD

Item No.	DESCRIPTION	Commencing (E) 18G/101 Part Number	Illus. No.	Qty. per Veh.	MODIFICATIONS New Part Number	MODIFICATIONS Change Point	REMARKS
1	**Gearbox assembly**	**22H211**		1			my type gearbox
2	**Casing assembly**	**48G283**	1	1			to year Unit No 20
3	Dowel—locating block to gearbox	AEG3108	2	2			Synchro. Unit No 29
4	Stud—front cover	53K2172	3	7			
5	Stud—rear extension	CHS2513	4	2			
6	Plug—welch—casing	2K8158	5	1			
7	Plug—drain	2K5830	6	1			
8	**Cover assembly—front**	**48G266**	7	1			
9	Seal—oil	1H3138	8	1			
10	Joint washer—front cover to casing	1G3666	9	1			
11	Washer—spring—stud—front cover to casing	LWZ305	10	7			
12	Nut—stud	FNZ105	11	7			
13	Cover—gearbox side	1G3656	12	1			
14	Joint washer—side cover to casing	1G3658	13	1			
15	Screw—gearbox side cover	53K147	14	7			
16	Washer—spring—screw	LWZ305	15	6			
17	Washer—plain—screw	PWZ105	16	1			
18	Washer—fibre screw	2K4958	17	1			
19	Screw—countersunk—gearbox side cover	53K162	18	3			
20	Washer—shakeproof—screw	6K9012	19	3			
21	Extension—rear	22H150	20	1			
22	Plug—taper—rear extension	2K1356	21	2			
23	Button—thrust—speedometer pinion	1A3073	22	1			
24	Bearing—rear extension	6K529	23	1			
25	Seal—oil—rear extension	1H3275	24	1			
26	Circlip—oil seal	CCN240	25	1			
27	Joint washer—extension to casing	1G3712	26	1			
28	Screw—extension to casing	HCZ0510	27	6			
29	Washer—spring—screw	LWZ305	28	6			
30	Washer—spring—stud	LWZ305		2			
31	Nut—stud—rear extension to casing	FNZ105	29	2			
32	Cover—side—rear extension	1G3809	30	1			
33	Joint washer—side cover to extension	1G3810	31	1			
34	Screw—side cover to extension	HZS0405	32	6			
35	Washer—spring—screw	LWZ304	33	6			
36	**Breather assembly**	**1H3364**	34	1			
37	**Shaft—1st motion**	**22H56**	35	1			
38	Bearing	6K885	36	1			
39	Ring—spring—bearing	6K886	37	1			

Item No.	DESCRIPTION	Commencing (E) 18G/101 Part Number	Illus. No.	Qty. per Veh.	MODIFICATIONS New Part Number	MODIFICATIONS Change Point	REMARKS
	Gearbox—Standard—*continued*						
1	Shim—1st motion shaft—·002" (·051 mm.)	6K907	38	A/R			
2	Shim—1st motion shaft—·004" (·102 mm.)	6K908		A/R			
3	Roller—needle—1st motion shaft	6K892	39	18			
4	Washer—locking—1st motion shaft nut	1A3717	40	1			
5	Nut—1st motion shaft	1G3584	41	1			
6	**Housing—rear bearing**	**1G3586**	**42**	**1**			
7	Peg—locating—rear bearing housing	1G3530	43	1			
8	Bearing—rear—3rd motion shaft	6K528	44	1			
9	Distance piece assembly—speedometer gear to rear bearing	AEH3242	45	1			
10	Flange—3rd motion shaft	1H3304	46	1			
11	Nut—3rd motion shaft flange	FNZ612	47	1			
12	Washer—spring—nut	LWZ212	48	1			
13	Fork—reverse	11G3134	49	1			
14	Screw—reverse fork locating	2A3141	50	1			
15	Washer—shakeproof—screw	LWN404	51	1			
16	Nut—screw—fork locating	FNN504	52	1			
17	Fork—1st and 2nd speed	11G3135	53	1			
18	Screw—fork locating	2A3141	54	1			
19	Washer—shakeproof—screw	LWN404	55	1			
20	Nut—screw—fork locating	FNN504	56	1			
21	Rod—1st and 2nd speed fork	11G3079	57	1			
22	Fork—3rd and 4th speed	1H3257	58	1			
23	Screw—fork locating	2A3141	59	1			
24	Washer—shakeproof—screw	LWN404	60	1			
25	Nut—screw—fork locating	FNN504	61	1			
26	Rod—3rd and 4th speed fork	11G3140	62	1			
27	Distance piece—3rd and 4th speed fork rod	1H3258	63	1			
28	Rod—reverse fork	11G3137	64	1			
29	Ball—fork locating	BLS110	65	3			
30	Spring—locating ball	22A75	66	3			
31	Block—sliding shaft locating	11G3187	67	1			
32	Screw—locating block to gearbox	HNS0407	68	2			
33	Washer—spring—screw	LWN304	69	2			
34	Selector—1st and 2nd gear	11G3132	70	1			
35	Screw—selector locating	1G3708	71	1			
36	Selector—3rd and 4th gear	11G3133	72	1			
37	Screw—selector locating	1G3708	73	1			
38	Selector—reverse gear	11G3131	74	1			
39	Screw—selector locating	1G3708	75	1			

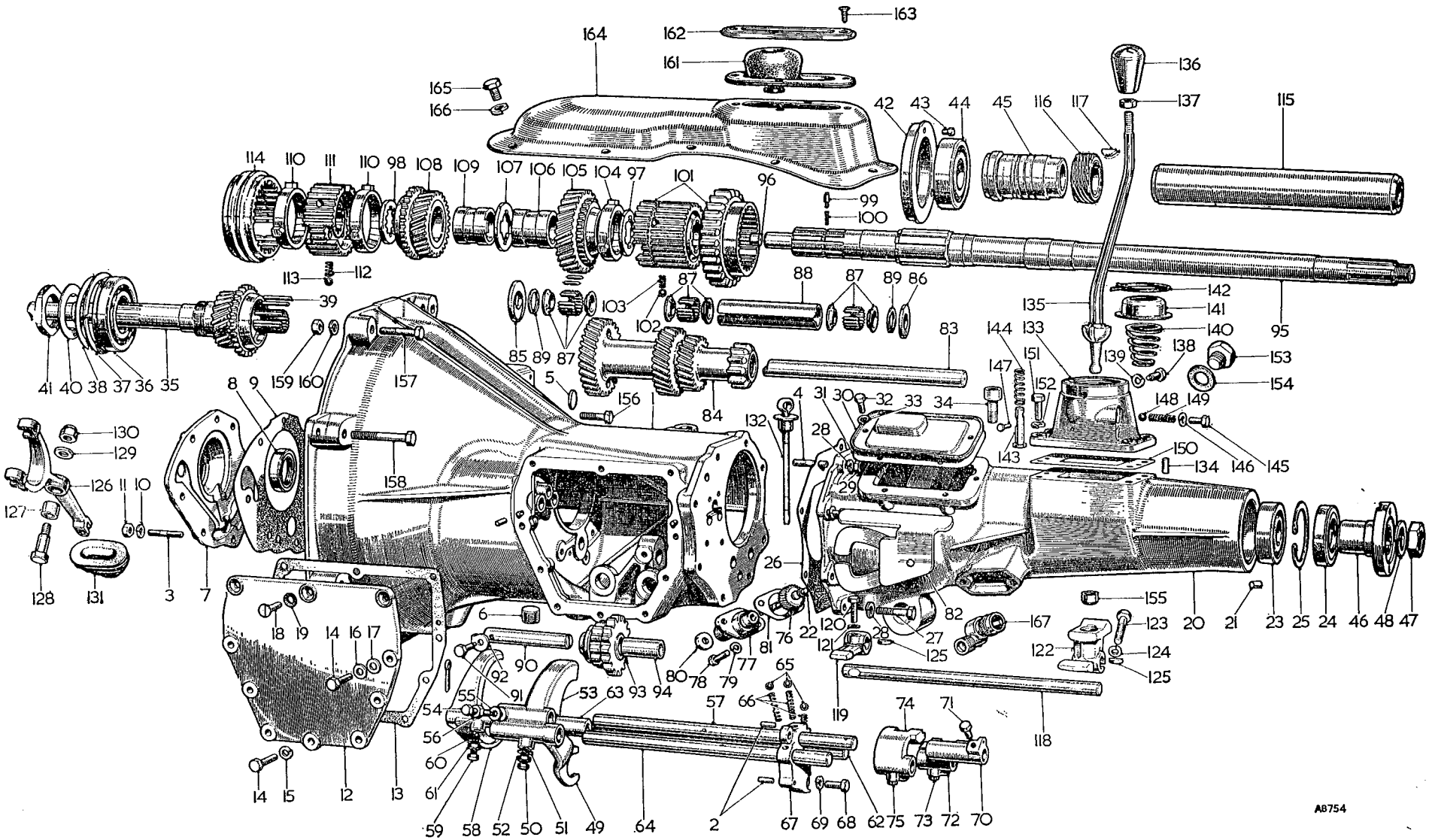

To face page F.2

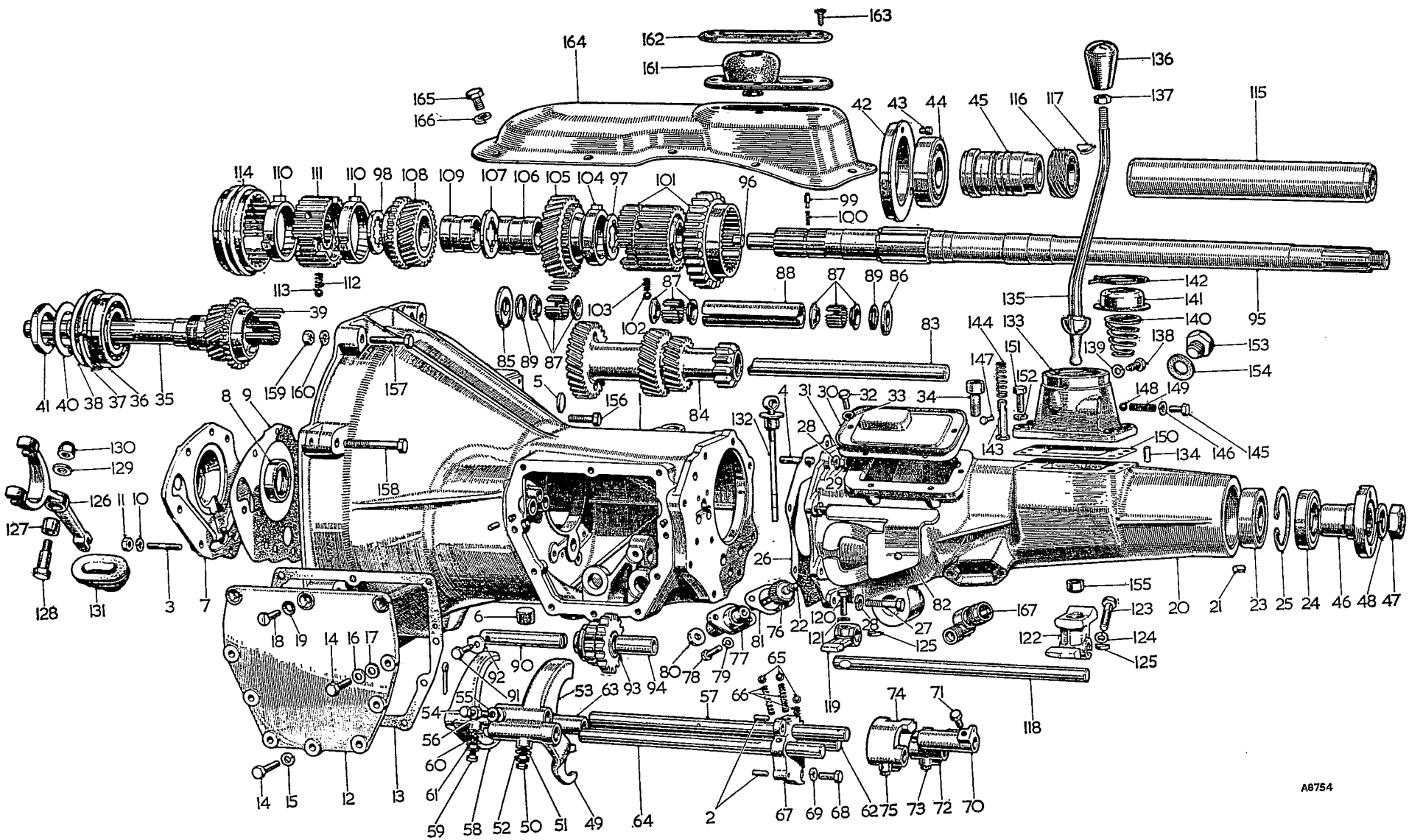

To face page F.3

Item No.	DESCRIPTION	Commencing (E) 18G/101 Part Number	Illus. No.	Qty. per Veh.	MODIFICATIONS New Part Number	MODIFICATIONS Change Point	REMARKS
	Gearbox—Standard—*continued*						
1	**Pinion—speedometer**	**11G3264**	**76**	**1**			
2	Bush—speedometer pinion	22H29	77	1			
3	Screw—speedometer pinion bush	HZS0406	78	2			
4	Washer—lock—screw	LWZ404	79	2			
5	Seal—oil—speedometer pinion	2A3254	80	1			
6	Joint washer—speedometer pinion bush	11G3228	81	1			
7	Arm assembly—interlocking	22H35	82	1			
8	**Layshaft**	**1H3305**	**83**	**1**			
9	**Gear unit—layshaft**	**22H54**	**84**	**1**			
10	Washer—thrust—front—laygear	1G3576	85	A/R			] Alternatives
11	Washer—thrust—rear—·154 to ·156″ (3·912 to 3·962 mm.)	1G3577	86	A/R			
12	Washer—thrust—rear—·157 to ·158″ (3·988 to 4·013 mm.)	1G3578		A/R			
13	Washer—thrust—rear—·160 to ·161″ (4·06 to 4·085 mm.)	1G3579		A/R			
14	Washer—thrust—rear—·163 to ·164″ (4·136 to 4·162 mm.)	1G3580		A/R			
15	Roller—needle bearing—layshaft	3H2865	87	3			
16	Tube—distance—laygear bearing	11G3026	88	1			
17	Ring—spring—layshaft	11G3027	89	4			
18	Shaft—reverse	11G3124	90	1			] Alternatives
19	Shaft—reverse	11G3093		1			
20	Screw—reverse shaft	1G3581	91	1			
21	Washer—locking—screw	1B3363	92	1			
22	**Gear assembly—reverse**	**22H83**	**93**	**1**			
23	Bush—reverse gear	11G3092	94	1			
24	Shaft—3rd motion	1H3277	95	1			
25	Restrictor—oil	1A1964	96	1			
26	Washer—thrust—rear—3rd motion shaft	1G3492	97	1			
27	Washer—thrust—front—·1565 to ·1575″ (3·962 to 3·988 mm.)	11G3127	98	A/R			
28	Washer—thrust—front—·1585 to ·1595″ (4·013 to 4·039 mm.)	11G3128		A/R			
29	Washer—thrust—front—·1605 to ·1615″ (4·06 to 4·085 mm.)	11G3129		A/R			
30	Peg—thrust washer	1G3268	99	1			
31	Spring—peg	2K8960	100	1			
32	**First speed wheel and synchronizer assembly**	**48G206**	**101**	**1**			
33	Ball—synchronizer	BLS109	102	3			
34	Spring—synchronizer ball	6K884	103	3			
35	Baulk ring—2nd speed gear	11G3063	104	1			
36	**Gear—2nd speed**	**11G3064**	**105**	**1**			
37	Bush—2nd speed mainshaft gear	11G3028	106	1			
38	Ring—interlocking—2nd and 3rd gear bushes	1G3331	107	1			
39	**Gear—3rd speed**	**1G3594**	**108**	**1**			
40	Bush—3rd speed gear	11G3029	109	1			
41	Baulk ring—3rd and 4th speed gear	11G3022	110	2			

Item No.	DESCRIPTION	Commencing (E) 18G/101 Part Number	Illus. No.	Qty. per Veh.	MODIFICATIONS New Part Number	MODIFICATIONS Change Point	REMARKS
	Gearbox—Standard—*continued*						
1	Synchronizer—3rd and 4th speed	1G3597	111	1			
2	Spring—synchronizer ball	6K884	112	3			
3	Ball—synchronizer	BLS109	113	3			
4	Coupling—sliding—3rd and 4th speed	1G3598	114	1			
5	Distance piece—3rd motion shaft	11G3223	115	1			
6	**Gear—speedometer**	**1H3369**	**116**	**1**			
7	Key—speedometer gear	WKN304	117	1			
8	Shaft—remote control (rear extension)	1H3368	118	1			
9	Lever—selector—front	1G3680	119	1			] Alternatives
10	Lever—selector—front	22H24		1			
11	Screw—selector lever—front	51K1030	120	1			
12	Washer—shakeproof—screw	LWN404	121	1			
13	Lever—selector—rear	1H3095	122	1			] Alternatives
14	Lever—selector—rear (long pad)	22H25		1			
15	Screw—selector lever—rear	51K1031	123	1			
16	Washer—spring—screw	2K5319	124	1			
17	Key—selector lever	WKN404	125	2			
18	**Lever—clutch withdrawal**	**22B56**	**126**	**1**			
19	Bush—withdrawal lever	11G3195	127	1			
20	Bolt—clutch withdrawal lever	11G3196	128	1			
21	Washer—bolt	11G3199	129	1			
22	Nut—stiff—bolt	LNZ206	130	1			
23	Cover—dust—clutch withdrawal lever	1G3667	131	1			
24	Indicator—oil level—gearbox	1G3802	132	1			
25	**Tower—remote control**	**1H3130**	**133**	**1**			
26	Dowel—remote control tower	AEG3101	134	2			
27	Lever—change speed	22H152	135	1			
28	Knob—change speed lever	1G3706	136	1			
29	Locknut—change speed knob	54K312	137	1			
30	Pin—locating—change speed lever	1H3101	138	2			
31	Washer—spring	LWZ304	139	2			
32	Spring—change speed lever	11G3144	140	1			
33	Cover—ball spring	1G3927	141	1			
34	Circlip—ball spring cover	1H3087	142	1			
35	Plunger—reverse selector	1G3707	143	1			
36	Spring—reverse plunger	1G3863	144	1			
37	Screw—reverse plunger spring	HZS0603	145	1			
38	Washer—spring—screw	LWZ206	146	1			
39	Pin—locating—reverse plunger	2A3378	147	1			
40	Ball—reverse plunger	BLS110	148	1			
41	Spring—reverse plunger detent	22A75	149	1			
42	Gasket—control tower	1G3711	150	2			

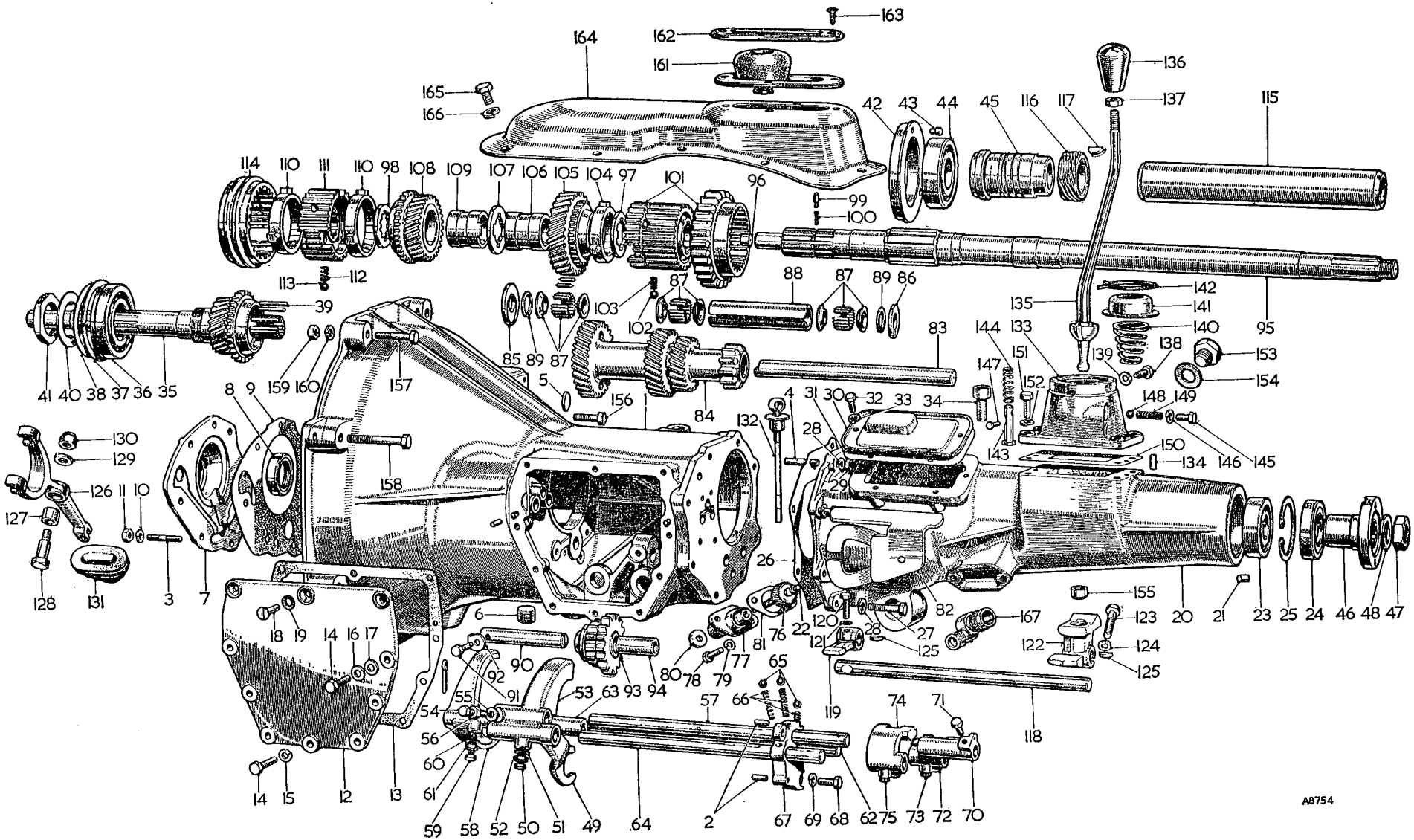

To face page F.4

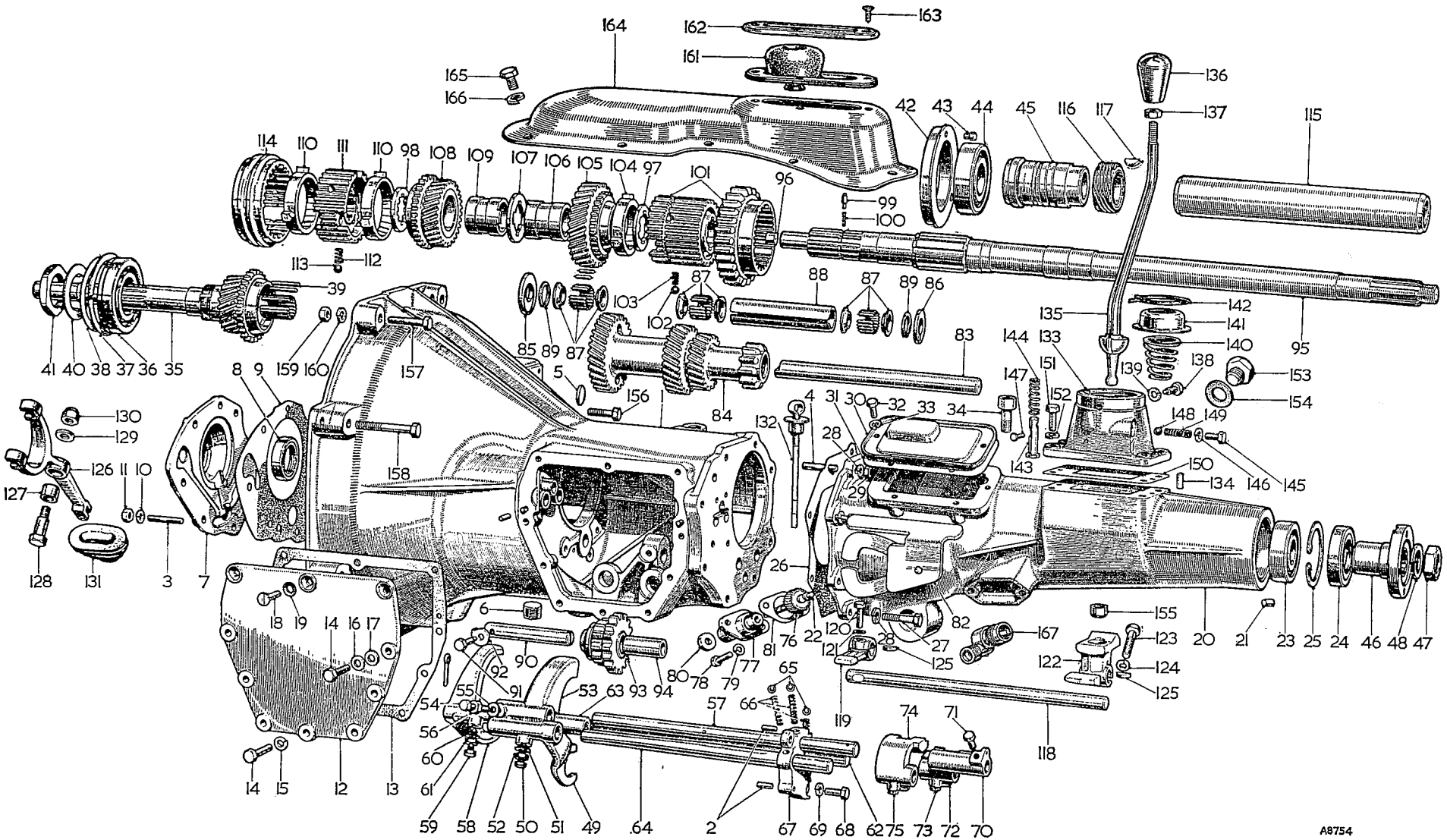

To face page F.5

Item No.	DESCRIPTION	Commencing (E) 18G/101 Part Number	Illus. No.	Qty. per Veh.	MODIFICATIONS New Part Number	MODIFICATIONS Change Point	REMARKS
	Gearbox—Standard—*continued*						
1	Screw—tower to extension	53K143	151	4			
2	Washer—spring—screw	LWZ305	152	4			
3	Plug—reverse light switch hole	1H3026	153	1			
4	Joint washer—plug	1B3664	154	1			
5	Bush—change speed lever	22H15	155	1			
6	Bolt—gearbox to mounting plate	HBZ0510	156	1			
7	Bolt—gearbox to mounting plate	HBZ0515	157	2			
8	Bolt—gearbox to mounting plate	HBZ0520	158	4			
9	Nut—bolt	FNZ505	159	7			
10	Washer—spring—bolt	LWZ305	160	7			
11	Grommet—gear lever	AHH6350	161	1			
12	Retainer—gear lever grommet	AHH6486	162	1			
13	Screw—retainer to cover	RTP1006	163	4			
14	Cover—gearbox remote control	HZA266	164	1			
15	Screw—cover to tunnel	HZS0404	165	11			
16	Washer—spring	LWZ204	166	11			
17	**Box—speedometer drive adaptor**	**1H3131**	**167**	**1**			
18	Washer—adaptor to gearbox	3H550		1			

GEARBOX—OVERDRIVE

Item No.	DESCRIPTION	Commencing (E) 18G/5101 Part Number	Illus. No.	Qty. per Veh.	MODIFICATIONS New Part Number	MODIFICATIONS Change Point	REMARKS
1	**Gearbox assembly**	**22H209**		**1**			
2	**Casing assembly**	**48G265**	1	**1**			
3	Dowel—locating block to gearbox	AEG3108	2	2			
4	Stud—front cover	53K2172	3	7			
5	Stud—overdrive adaptor	CHS2511	4	8			
6	Plug—welch—casing	2K8158	5	1			
7	Plug—drain	2K5830	6	1			
8	**Cover assembly—front**	**48G266**	7	**1**			
9	Seal—oil	1H3138	8	1			
10	Joint washer—front cover to casing	1G3666	9	1			
11	Washer—spring—stud—front cover to casing	LWZ305	10	7			
12	Nut—stud	FNZ105	11	7			
13	Cover—gearbox side	1G3656	12	1			
14	Joint washer—side cover to casing	1G3658	13	1			
15	Screw—gearbox side cover	53K147	14	7			
16	Washer—spring—screw	LWZ305	15	6			
17	Washer—plain—screw	PWZ105	16	1			
18	Washer—fibre—screw	2K4958	17	1			
19	Screw—countersunk—gearbox side cover	53K162	18	3			
20	Washer—shakeproof—screw	6K9012	19	3			
21	**Adaptor—overdrive**	**22H479**	20	**1**			
22	Plug—taper	2K1356	21	1			
23	Joint washer—adaptor to casing	1G3712	22	1			
24	Joint washer—adaptor to overdrive	22H166	23	1			
25	Nut—stud—adaptor	FNZ505	24	8			
26	Washer—spring—nut	LWZ205	25	8			
27	**Breather assembly**	**1H3364**	26	**1**			
28	**Shaft—1st motion**	**22H56**	27	**1**			
29	Bearing	6K885	28	1			
30	Ring—spring—bearing	6K886	29	1			
31	Shim—1st motion shaft—·002″ (·051 mm.)	6K907	30	A/R			
32	Shim—1st motion shaft—·004″ (·102 mm.)	6K908		A/R			
33	Roller—needle—1st motion shaft	6K892	31	18			
34	Washer—locking—1st motion shaft nut	1A3717	32	1			

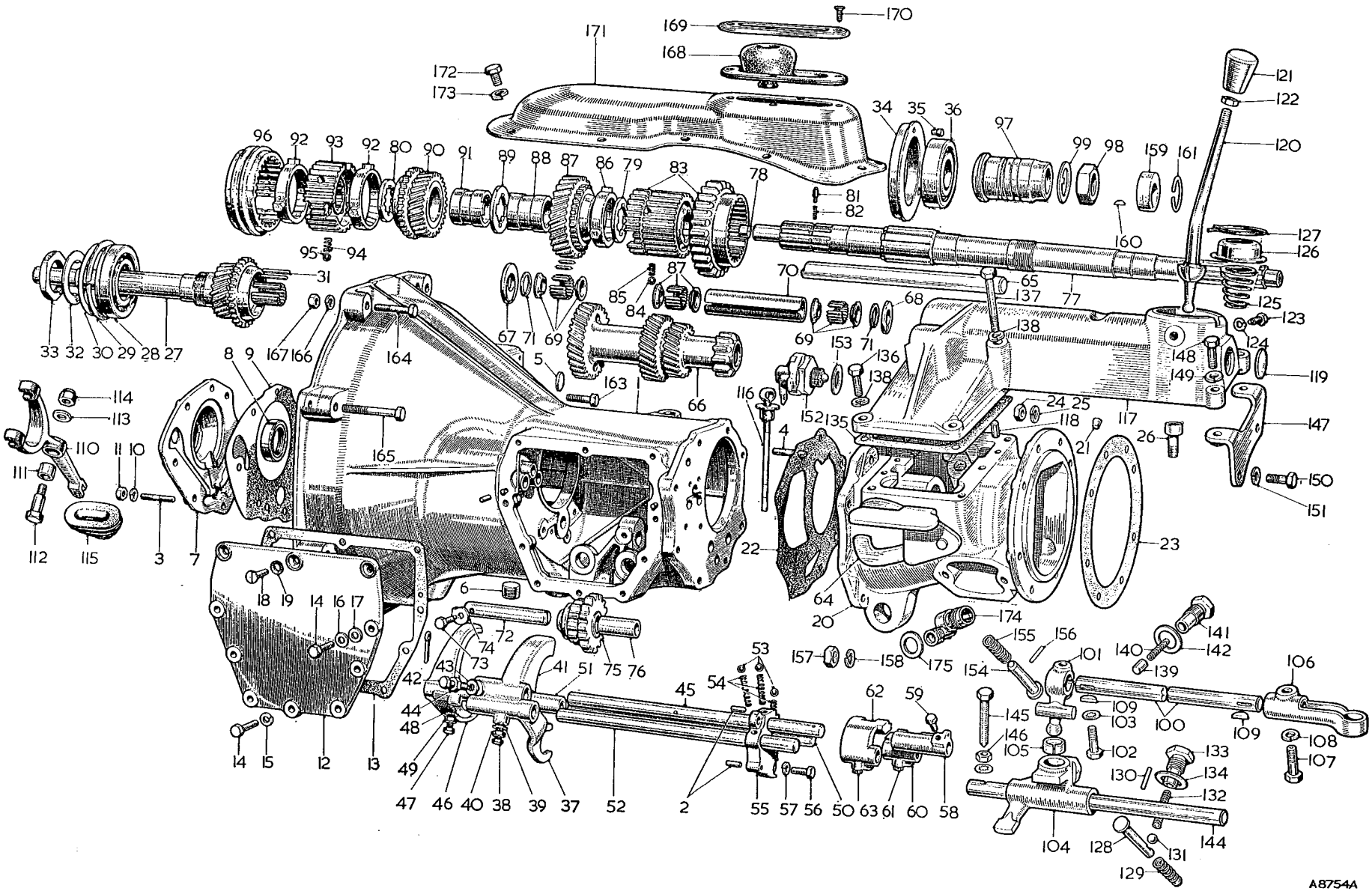

To face page F.6

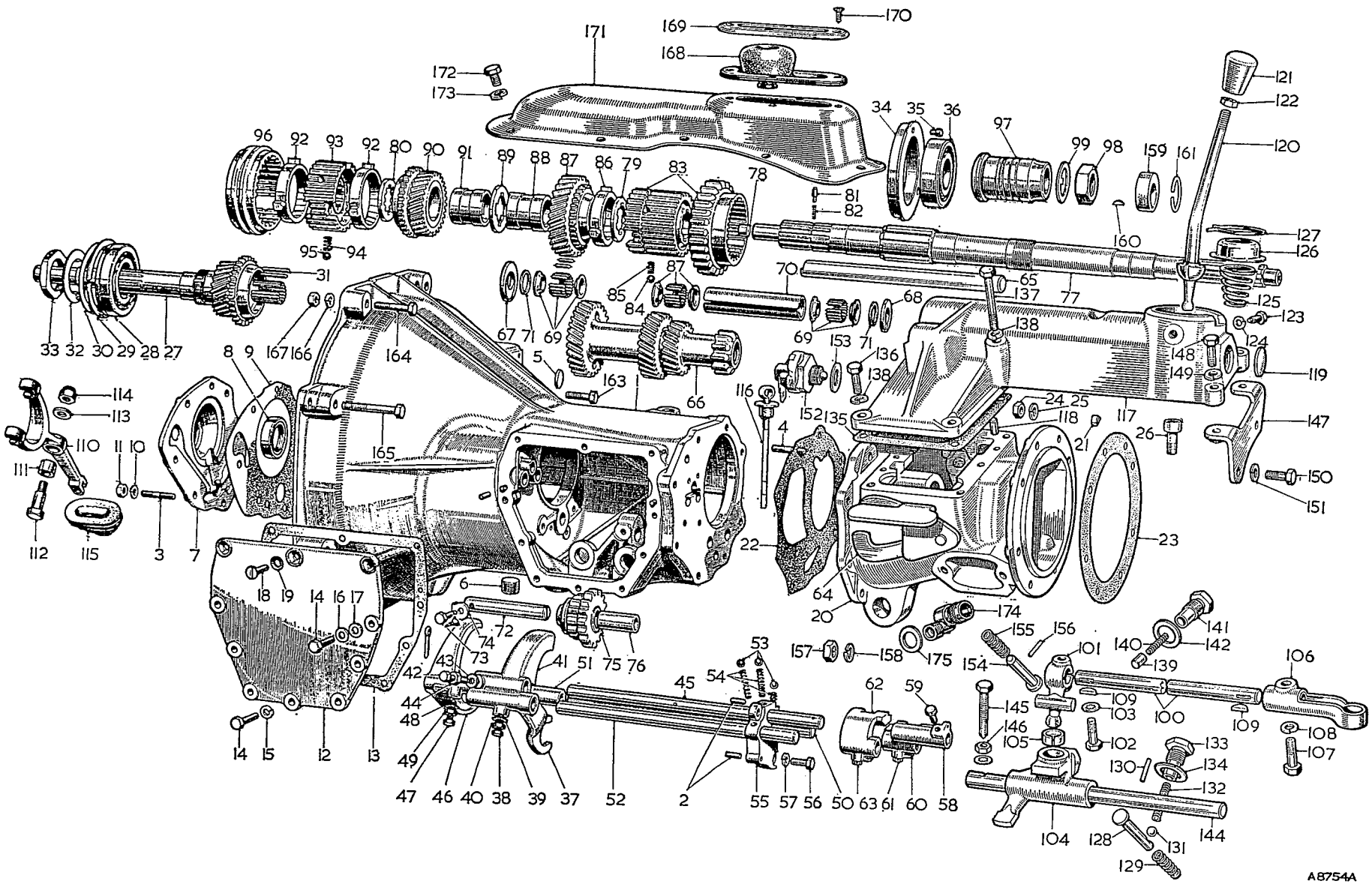

To face page F.7

Item No.	DESCRIPTION	Commencing (E) 18G/5101 Part Number	Illus. No.	Qty. per Veh.	MODIFICATIONS New Part Number	MODIFICATIONS Change Point	REMARKS
	Gearbox—Overdrive—*continued*						
1	Nut—1st motion shaft	1G3584	33	1			
2	**Housing—rear bearing**	**1G3586**	**34**	**1**			
3	Peg—locating—rear bearing housing	1G3530	35	1			
4	Bearing—rear—3rd motion shaft	6K528	36	1			
5	Fork—reverse	11G3134	37	1			
6	Screw—reverse fork locating	2A3141	38	1			
7	Washer—shakeproof—screw	LWN404	39	1			
8	Nut—screw—fork locating	FNN504	40	1			
9	Fork—1st and 2nd speed	11G3135	41	1			
10	Screw—fork locating	2A3141	42	1			
11	Washer—shakeproof—screw	LWN404	43	1			
12	Nut—screw—fork locating	FNN504	44	1			
13	Rod—1st and 2nd speed fork	11G3079	45	1			
14	Fork—3rd and 4th speed	1H3257	46	1			
15	Screw—fork locating	2A3141	47	1			
16	Washer—shakeproof—screw	LWN404	48	1			
17	Nut—screw—fork locating	FNN504	49	1			
18	Rod—3rd and 4th speed fork	11G3140	50	1			
19	Distance piece—3rd and 4th speed fork rod	1H3258	51	1			
20	Rod—reverse fork	11G3137	52	1			
21	Ball—fork locating	BLS110	53	3			
22	Spring—locating ball	22A75	54	3			
23	Block—sliding shaft locating	11G3187	55	1			
24	Screw—locating block to gearbox	HNS0407	56	2			
25	Washer—spring—screw	LWN304	57	2			
26	Selector—1st and 2nd gear	11G3132	58	1			
27	Screw—selector locating	1G3708	59	1			
28	Selector—3rd and 4th gear	11G3133	60	1			
29	Screw—selector locating	1G3708	61	1			
30	Selector—reverse gear	11G3131	62	1			
31	Screw—selector locating	1G3708	63	1			
32	Arm assembly—interlocking	22H158	64	1			
33	Layshaft	1H3305	65	1			
34	Gear unit—layshaft	22H54	66	1			
35	Washer—thrust—front—laygear	1G3576	67	A/R			
36	Washer—thrust—rear—·154 to ·156″ (3·912 to 3·962 mm.)	1G3577	68	A/R			Alternatives
37	Washer—thrust—rear—·157 to ·158″ (3·988 to 4·013 mm.)	1G3578		A/R			Alternatives
38	Washer—thrust—rear—·160 to ·161″ (4·06 to 4·085 mm.)	1G3579		A/R			Alternatives
39	Washer—thrust—rear—·163 to ·164″ (4·136 to 4·162 mm.)	1G3580		A/R			Alternatives

Item No.	DESCRIPTION	Commencing (E) 18G/5101 Part Number	Illus. No.	Qty. per Veh.	MODIFICATIONS New Part Number	MODIFICATIONS Change Point	REMARKS
	Gearbox—Overdrive—*continued*						
1	Roller—needle bearing—layshaft	3H2865	69	3			
2	Tube—distance—laygear bearing	11G3026	70	1			
3	Ring—spring—layshaft	11G3027	71	4			
4	Shaft—reverse	11G3124	72	1			] Alternatives
5	Shaft—reverse	11G3093		1			
6	Screw—reverse shaft	1G3581	73	1			
7	Washer—locking—screw	1B3363	74	1			
8	**Gear assembly—reverse**	**22H83**	**75**	**1**			
9	Bush—reverse gear	11G3092	76	1			
10	**Shaft—3rd motion**	**22H226**	**77**	**1**			
11	Restrictor—oil	1A1964	78	1			
12	Washer—thrust—3rd motion shaft—rear	1G3492	79	1			
13	Washer—thrust—front—·1565 to ·1575″ (3·962 to 3·988 mm.)	11G3127	80	A/R			] Alternatives
14	Washer—thrust—front—·1585 to ·1595″ (4·013 to 4·039 mm.)	11G3128		A/R			
15	Washer—thrust—front—·1605 to ·1615″ (4·06 to 4·085 mm.)	11G3129		A/R			
16	Peg—thrust washer	1G3268	81	1			
17	Spring—peg	2K8960	82	1			
18	**First speed wheel and synchronizer assembly**	**48G206**	**83**	**1**			
19	Ball—synchronizer	BLS109	84	3			
20	Spring—synchronizer ball	6K884	85	3			
21	Baulk ring—2nd speed gear	11G3063	86	1			
22	**Gear—2nd speed**	**11G3064**	**87**	**1**			
23	Bush—2nd speed mainshaft gear	11G3028	88	1			
24	Ring—2nd and 3rd gear bushes—interlocking	1G3331	89	1			
25	**Gear—3rd speed**	**1G3594**	**90**	**1**			
26	Bush—3rd speed gear	11G3029	91	1			
27	Baulk ring—3rd and 4th speed gear	11G3022	92	2			
28	Synchronizer—3rd and 4th speed	1G3597	93	1			
29	Spring—synchronizer ball	6K884	94	3			
30	Ball—synchronizer	BLS109	95	3			
31	Coupling—sliding—3rd and 4th speed	1G3598	96	1			
32	Distance piece—3rd motion shaft	11G3223	97	1			
33	Nut—distance piece	11G3225	98	1			
34	Washer—lock—distance piece	11G3226	99	1			
35	Shaft—remote control	22H431	100	1			
36	Lever—selector—front	22H173	101	1			
37	Screw—selector lever—front	22H174	102	1			
38	Washer—shakeproof—screw	LWN405	103	1			
39	Lever—selector—intermediate	22H254	104	1			
40	Bush—intermediate selector lever	22H15	105	1			
41	Lever—selector—rear	22H252	106	1			

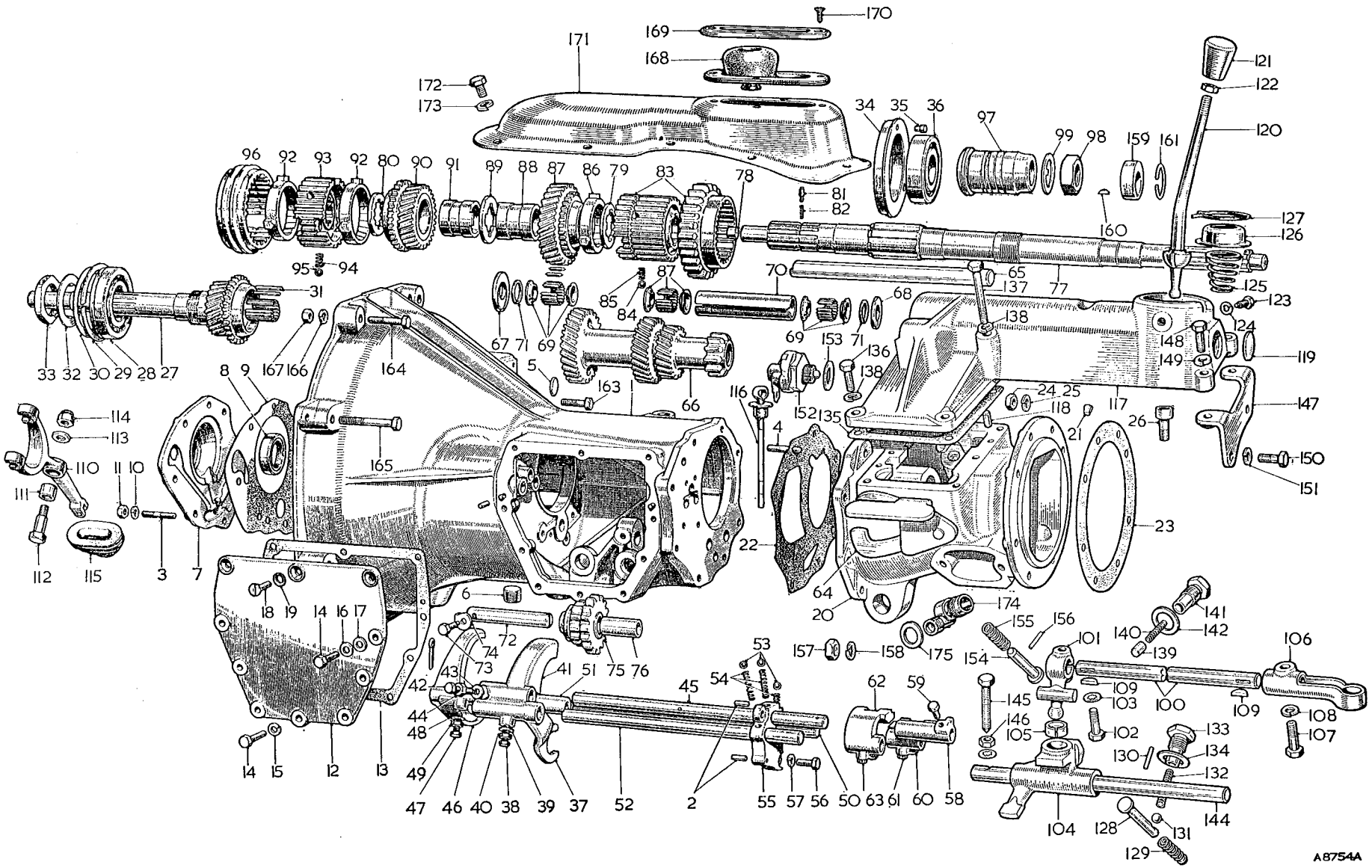

To face page F.8

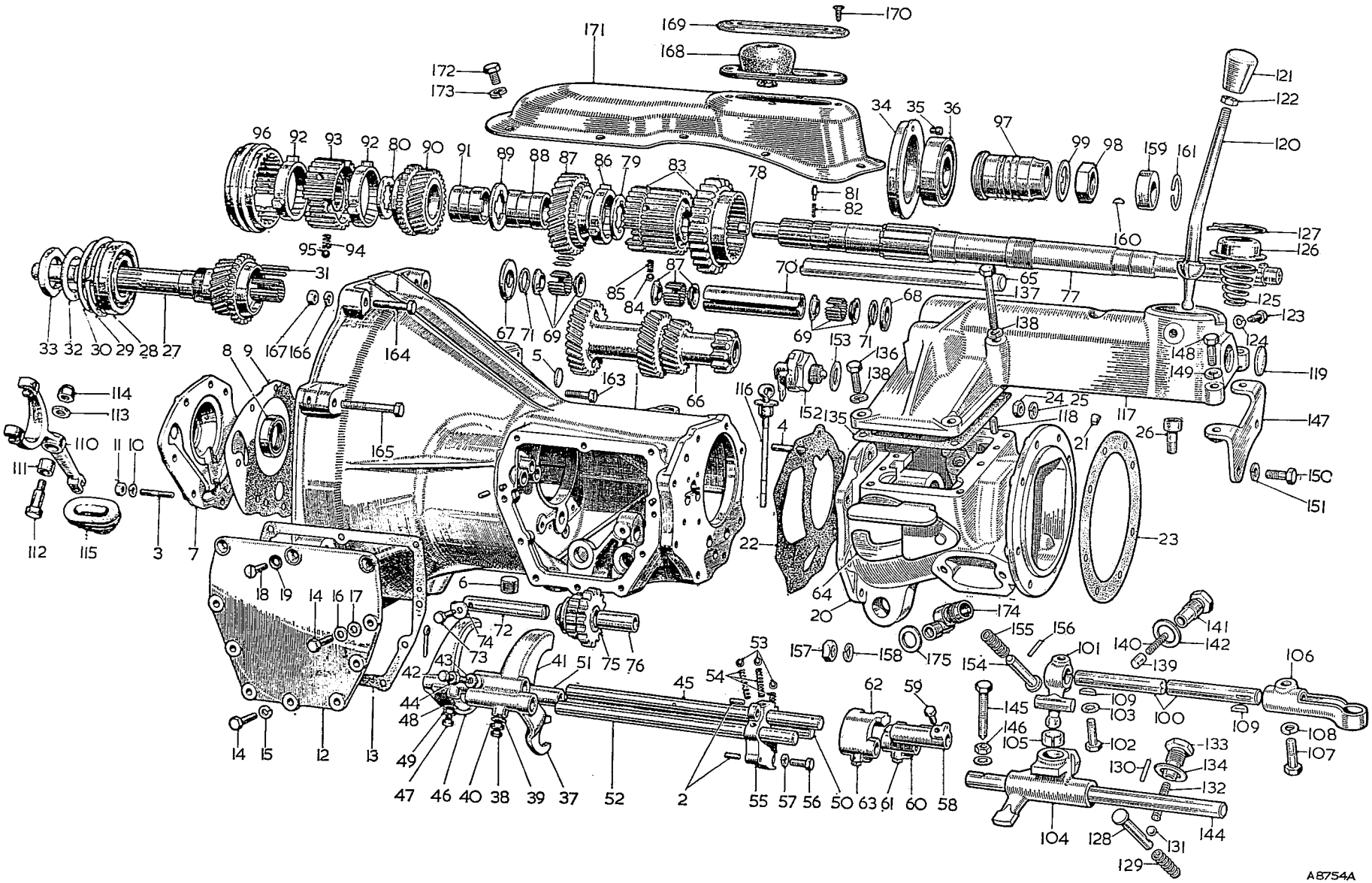

To face page F.9

Item No.	DESCRIPTION	Commencing (E) 18G/5101 Part Number	Illus. No.	Qty. per Veh.	MODIFICATIONS New Part Number	MODIFICATIONS Change Point	REMARKS
	Gearbox—Overdrive—*continued*						
1	Screw—rear selector lever	22H175	107	1			
2	Washer—spring—screw	LWZ305	108	1			
3	Key—front and intermediate selector levers	WKN404	109	2			
4	**Lever—clutch withdrawal**	**22B56**	**110**	**1**			
5	Bush—withdrawal lever	11G3195	111	1			
6	Bolt—clutch withdrawal lever	11G3196	112	1			
7	Washer—bolt	11G3199	113	1			
8	Nut—stiff—bolt	LNZ206	114	1			
9	Cover—dust—clutch withdrawal lever	1G3667	115	1			
10	Indicator—oil level—gearbox	1G3802	116	1			
11	**Tower—remote control**	**22H167**	**117**	**1**			
12	Dowel—remote control tower	AEG3101	118	2			
13	Plug—welch—tower	2K8158	119	2			
14	**Lever—change speed**	**22H251**	**120**	**1**			
15	Knob—change speed lever	1G3706	121	1			
16	Locknut—knob	FNP205	122	1			
17	Pin—change speed lever locating	1H3101	123	2			
18	Washer—spring—pin	LWZ304	124	2			
19	Spring—change speed lever	AEG3105	125	1			
20	Cover—ball spring	1G3927	126	1			
21	Circlip—ball spring cover	1H3087	127	1			
22	Plunger—reverse selector	22H163	128	1			
23	Spring—reverse plunger	1G3863	129	1			
24	Peg—reverse plunger	2K5414	130	1			
25	Ball—reverse selector	BLS110	131	1			
26	Spring—selector ball	22A75	132	1			
27	Plug—spring retaining	2A3379	133	1			
28	Washer—plug	6K638	134	1			
29	Joint washer—control tower to adaptor	22H168	135	1			
30	Bolt—short—tower to adaptor	ZCS0508	136	4			
31	Bolt—long—tower to adaptor	HBZ0520	137	2			
32	Washer—spring—bolt	LWZ305	138	6			
33	Plunger	22H176	139	1			
34	Spring—plunger	22H177	140	1			
35	Cap—spring retaining	22H178	141	1			
36	Washer—cap	AEG3122	142	1			

Item No.	DESCRIPTION	Commencing (E) 18G/5101 Part Number	Illus. No.	Qty. per Veh.	MODIFICATIONS New Part Number	MODIFICATIONS Change Point	REMARKS
	Gearbox—Overdrive—*continued*						
1	Shaft—selector lever	22H255	144	1			
2	Screw—locating—shaft	HPZ0411	145	1			
3	Nut—lock—screw	FNZ604	146	1			
4	Bracket—support—overdrive to remote control tower	22H206	147	1			
5	Screw—support bracket to remote control tower	HZS0409	148	2			
6	Washer—spring—screw	LWZ304	149	2			
7	Screw—support bracket to overdrive	HNS0406	150	2			
8	Washer—spring—screw	LWZ304	151	2			
9	Switch—overdrive isolation	AEJ20	152	1			
10	Joint washer—switch	2K7914	153	1			
11	Plunger—overdrive switch	22H203	154	1			
12	Spring—plunger	22H204	155	1			
13	Pin—locating—plunger	22H205	156	1			
14	Nut—stud	FNZ504	157	8			
15	Washer—spring	LWZ304	158	8			
16	Cam—overdrive pump	22H190	159	1			
17	Key—cam	22H191	160	1			
18	Ring—cam retaining	22H228	161	1			
19	Clip—3rd motion shaft	22H193	162	1			

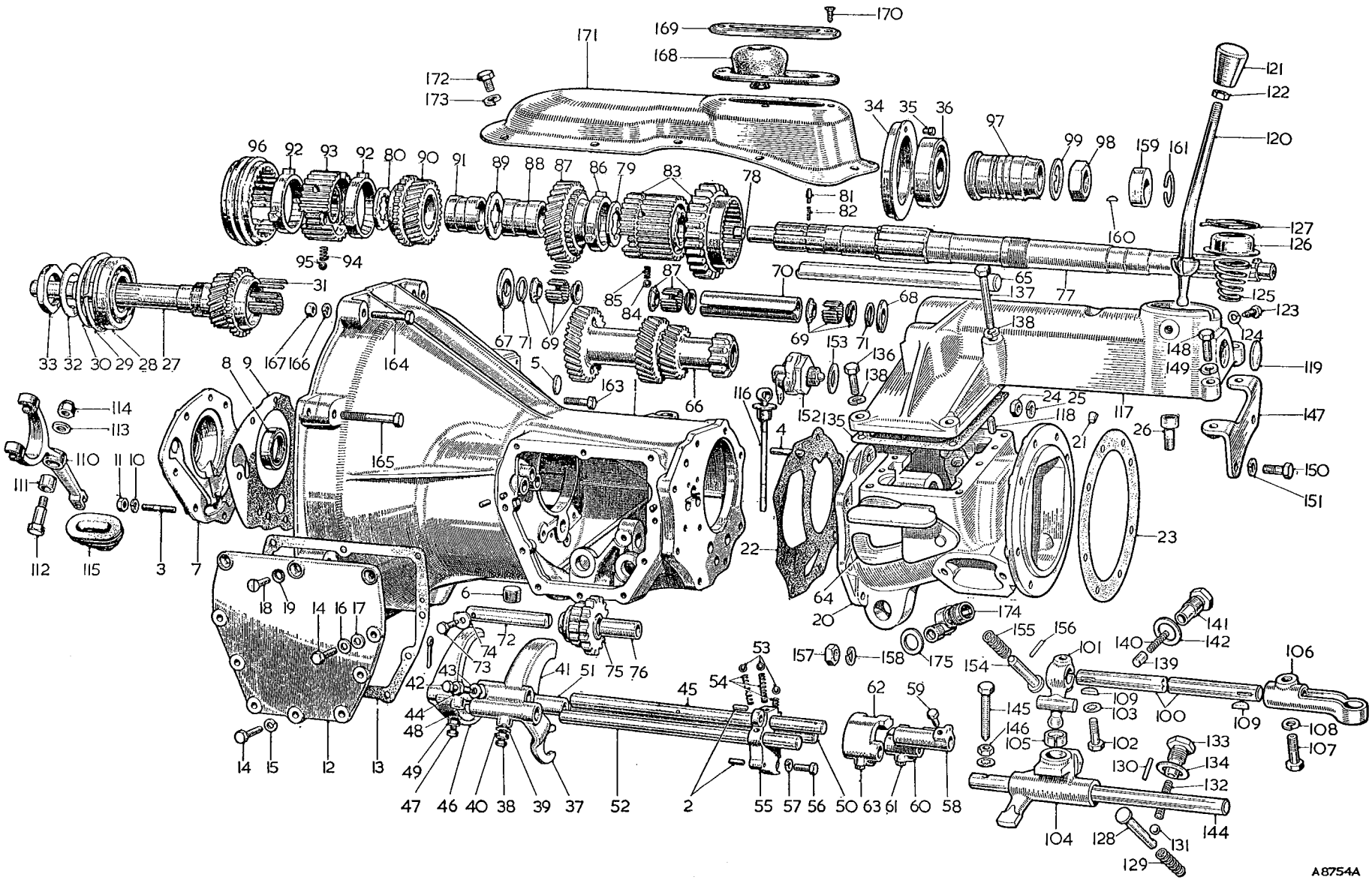

To face page F.10

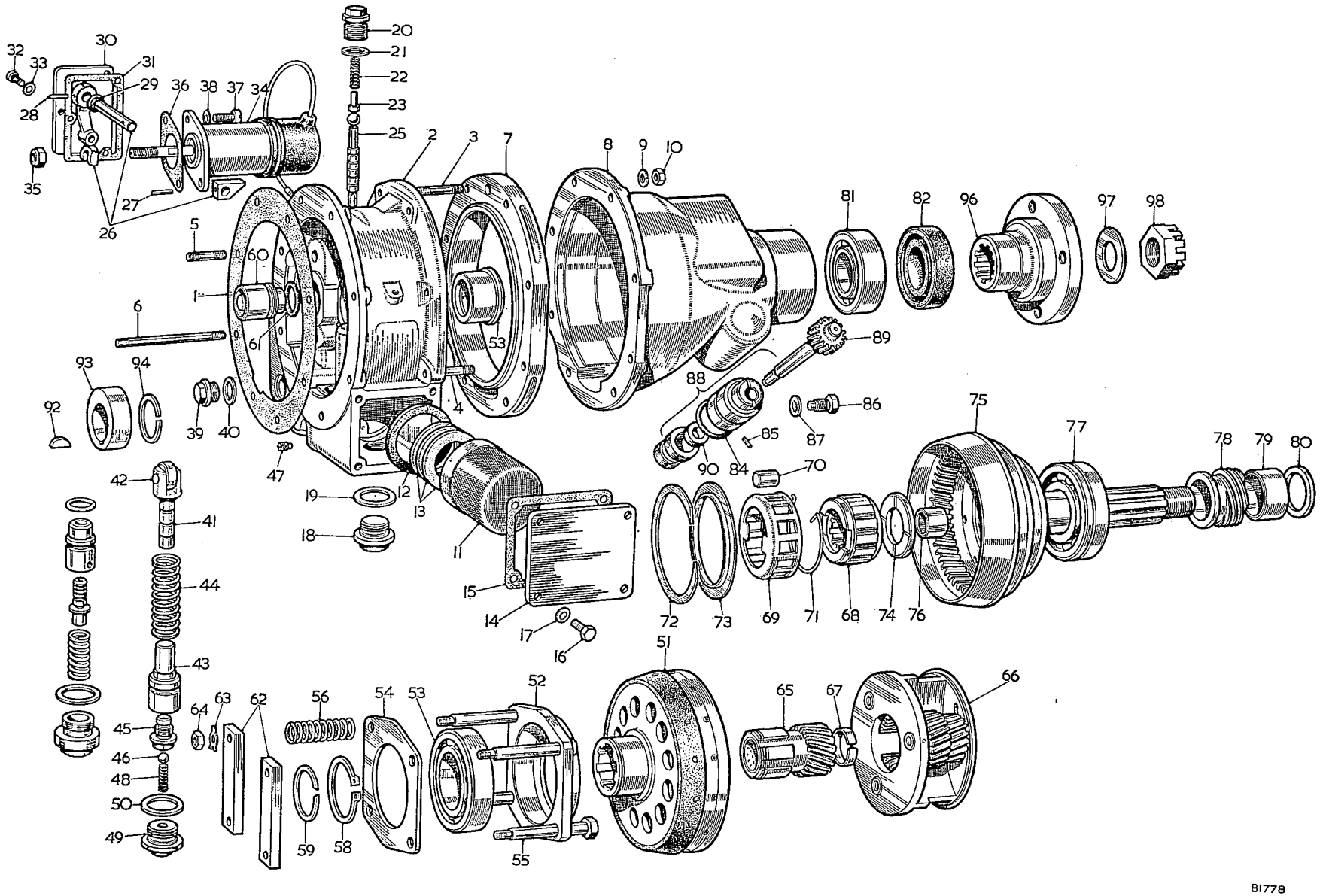

To face page F.11

Item No.	DESCRIPTION	Commencing (E) 18G/5101 Part Number	Illus. No.	Qty. per Veh.	MODIFICATIONS New Part Number	MODIFICATIONS Change Point	REMARKS
	Gearbox—Overdrive—*continued*						
1	**Overdrive unit**	**22H165**		1			
2	Joint washer—main casing to adaptor	7H8295	1	1			
3	**Casing assembly—main**	**17H8018**	2	1			
4	Stud—main casing to rear casing	7H8284	3	6			
5	Stud—main casing to rear casing	7H8296	4	2			
6	Stud—main casing to adaptor	7H8285	5	7			
7	Stud—long—main casing to adaptor	17H8022	6	1			
8	Ring—brake—clutch cone	7H8310	7	1			
9	**Casing assembly—rear**	**17H8019**	8	1			
10	Thrust button	7H8288		1			
11	Breather	17H5825		1			
12	Washer—spring—nut	7H8320	9	8			
13	Nut—rear to main casing stud	FNN104	10	8			
14	Filter	7H8197	11	1			
15	Plate—filter sealing	7H8299	12	1			
16	Ring—filter sealing (magnetic)	17H8604	13	3			
17	Plate—filter side cover	7H8292	14	1			
18	Washer—joint filter side cover	7H8293	15	1			
19	Screw—filter cover-plate	HNS0406	16	4			
20	Washer—cover-plate screw	LWN404	17	4			
21	Plug—filter drain	7H8303	18	1			
22	Washer—drain plug	7H8307	19	1			
23	Plug—valve operating	17H5876	20	1			
24	Washer—plug	7H5898	21	1			
25	Spring—valve operating	7H5836	22	1			
26	Plunger—ball valve	7H5837	23	1			
27	Valve—operating	17H8030	25	1			
28	**Lever assembly—valve operating**	**7H8184**	26	1			
29	Mills pin—operating lever	17H8036	27	1			
30	Mills pin	17H8035	28	1			
31	'O' ring—solenoid operating lever	17H5815	29	1			
32	Plate—side cover—solenoid	7H8195	30	1			
33	Washer—joint—solenoid cover-plate	7H8199	31	1			
34	Screw—solenoid cover-plate	7H8309	32	3			
35	Washer—cover-plate screw	LWN403	33	3			
36	Solenoid	17H8581	34	1			

Item No.	DESCRIPTION	Commencing (E) 18G/5101 Part Number	Illus. No.	Qty. per Veh.	MODIFICATIONS New Part Number	MODIFICATIONS Change Point	REMARKS
	Gearbox—Overdrive—*continued*						
1	Nut—solenoid adjusting	7H8324	35	1			
2	Washer—joint—solenoid	7H8196	36	1			
3	Screw—solenoid to casing	7H8309	37	2			
4	Washer—solenoid screw	LWN403	38	2			
5	Plug—solenoid adjusting nut	7H8306	39	1			
6	Washer—plug	7H8281	40	1			
7	**Pump plunger assembly**	**17H8015**	**41**	1			
8	Pin—bearing	17H8034	42	1			
9	Body—pump	7H8287	43	1			
10	Spring—pump plunger	7H5839	44	1			
11	**Non-return valve body assembly**	**7H8190**	**45**	1			
12	Steel ball	BLS107	46	1			
13	Screw—retaining pump non-return valve	7H8282	47	1			
14	Spring—pump non-return valve	7H8272	48	1			
15	Plug—non-return valve	7H8271	49	1			
16	Washer—plug	7H8307	50	1			
17	Clutch sliding member assembly	17H8017	51	1			
18	Housing—sun wheel bearing	7H8283	52	1			
19	Bearing—sun wheel	7H8301	53	1			
20	Base plate—clutch return spring	7H8297	54	1			
21	Bolt—bearing housing	7H8198	55	4			
22	Clutch spring set	17H8016	56	1			
23	Snap ring—bearing housing	7H8323	58	1			
24	Snap ring—sun gear retaining—bearing housing	7H8289	59	1			
25	Piston—operating	7H8290	60	2			
26	'O' ring—operating piston seal	7H8315	61	2			
27	Bridge bar	7H8286	62	2			
28	Washer—tab	7H5863	63	4			
29	Nut—bolt	FNN104	64	4			
30	Sun wheel assembly	7H8187	65	1			
31	Planet carrier assembly	17H8014	66	1			
32	Spring ring	17H8033	67	1			
33	Inner member	7H8274	68	1			
34	Cage—clutch	7H5881	69	1			
35	Steel roller	17H5823	70	set			
36	Spring—clutch	7H8273	71	1			

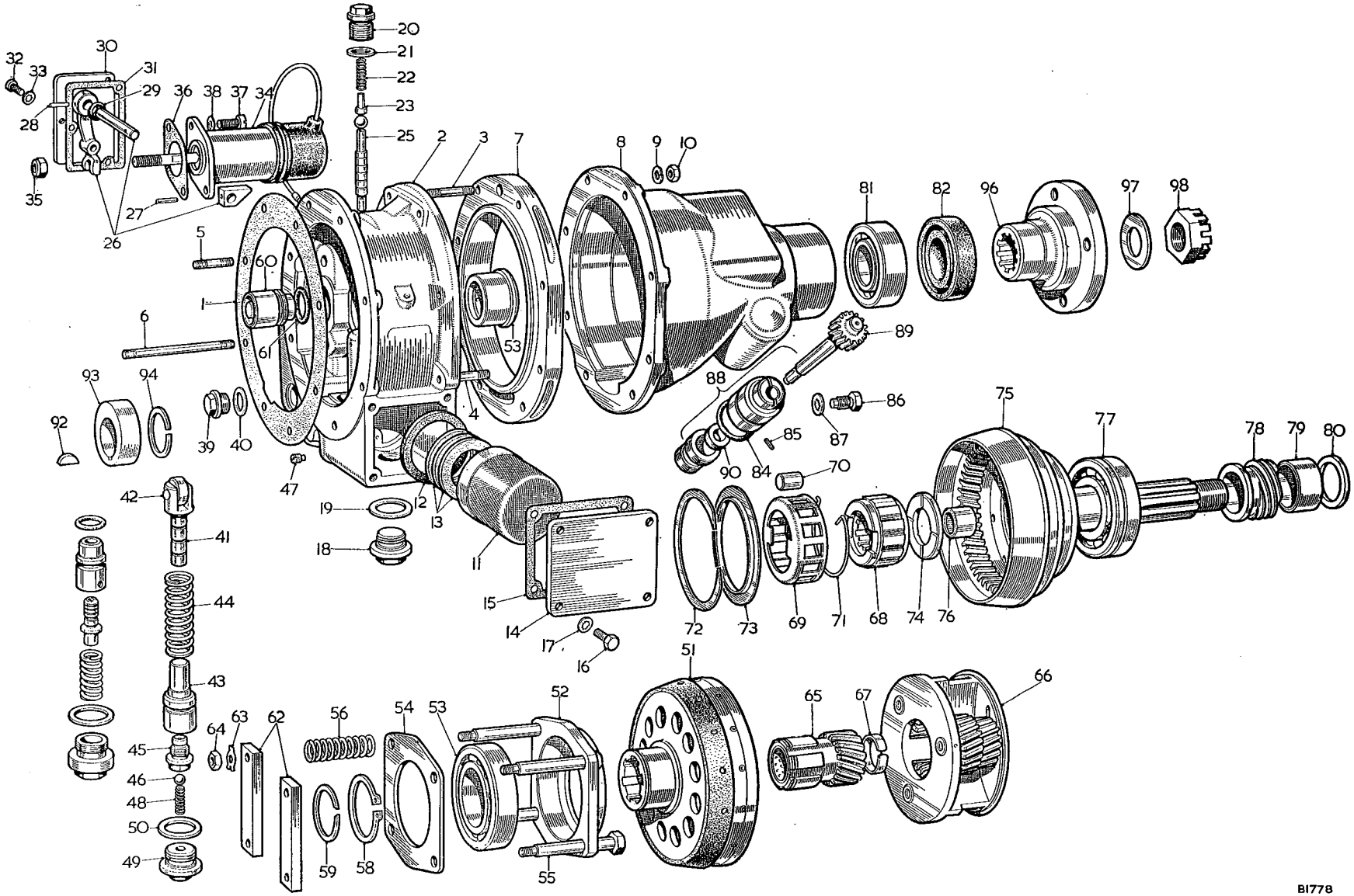

To face page F.12

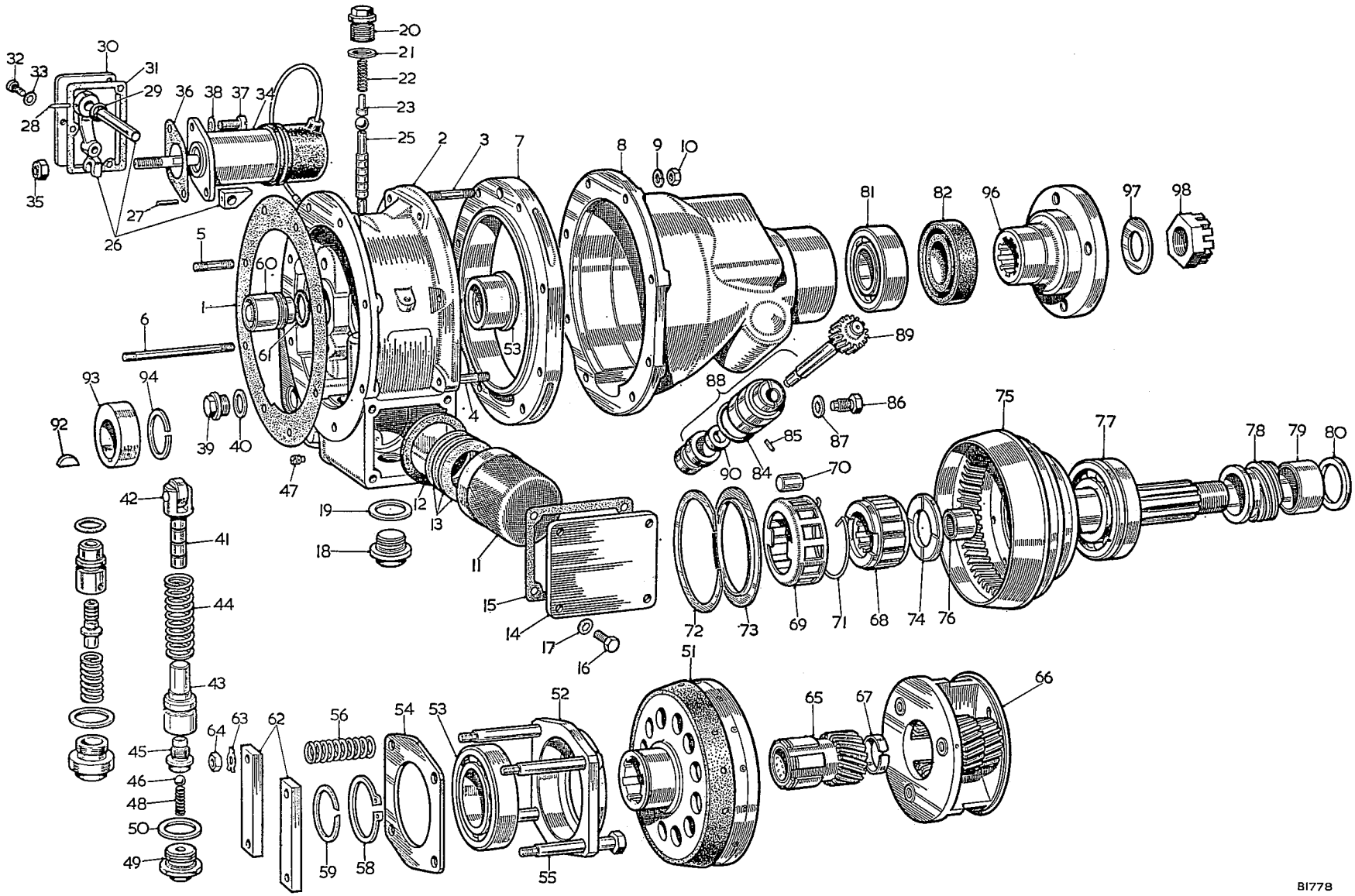

To face page F.13

Item No.	DESCRIPTION	Commencing (E) 18G/5101 Part Number	Illus. No.	Qty. per Veh.	MODIFICATIONS New Part Number	MODIFICATIONS Change Point	REMARKS
	Gearbox—Overdrive—*continued*						
1	Spring ring—clutch	7H8275	72	1			
2	Washer—clutch retaining	17H8028	73	1			
3	Washer—clutch thrust	7H5883	74	1			
4	**Annulus assembly**	**7H8194**	**75**	**1**			
5	Bearing—annulus assembly	7H8302	76	1			
6	Bearing—annulus assembly—front	7H8300	77	1			
7	Gear—speedometer driving	7H8294	78	1			
8	Tube—spacing—annulus assembly	17H8020	79	1			
9	Washer—annulus bearing adjusting—·105″ (2·68 mm.)	17H8024	80	1			Alternatives
10	Washer—annulus bearing adjusting—·100″ (2·54 mm.)	17H8025		1			Alternatives
11	Washer—annulus bearing adjusting—·095″ (2·40 mm.)	17H8026		1			Alternatives
12	Washer—annulus bearing adjusting—·090″ (2·28 mm.)	17H8027		1			Alternatives
13	Bearing—annulus rear	2F1966	81	1			
14	Seal—oil—annulus	7H8325	82	1			
15	**Bearing assembly—speedometer**	**17H8012**	**83**	**1**			
16	'O' ring—speedometer housing	7H8304	84	1			
17	Pin—bearing	17H8034	85	1			
18	Screw—locking—speedometer bearing	7H5894	86	1			
19	Washer—speedometer locking screw	17H5834	87	1			
20	**Drive assembly—speedometer**	**17H8013**	**88**	**1**			
21	Gear—speedometer driven	17H8021	89	1			
22	'O' ring—speedometer housing	7H8304	90	1			
23	Pin—bearing	17H8034	91	1			
24	Key—cam	22H191	92	1			
25	Cam—pump operating	17H8029	93	1			
26	Spring ring	7H8313	94	1			
27	Locknut	FNN212	95	1			
28	Flange—coupling	22H189	96	1			
29	Washer—coupling flange	LWZ212	97	1			
30	Nut—flange	FNZ612	98	1			
31	**Kit—relief valve**	**7H8191**		**1**			
32	'O' ring—relief valve			1			
33	Plug—relief valve			1			
34	Washer—relief valve plug			1			
35	Spring—relief valve			1			
36	Valve—relief			1			
37	Sleeve—outer—relief valve			1			
38	Pump			1			

Item No.	DESCRIPTION	Commencing (E) 18G/5101 Part Number	Illus. No.	Qty. per Veh.	MODIFICATIONS New Part Number	MODIFICATIONS Change Point	REMARKS
	Gearbox—Overdrive—*continued*						
1	Bolt—gearbox to mounting plate	HBZ0510	163	1			
2	Bolt—gearbox to mounting plate	HBZ0515	164	2			
3	Bolt—gearbox to mounting plate	HBZ0520	165	4			
4	Washer—spring—bolt	LWZ305	166	7			
5	Nut—bolt	FNZ505	167	7			
6	Grommet—gear lever	AHH6350	168	1			
7	Retainer—gear lever grommet	AHH6486	169	1			
8	Screw—retainer to cover	RTP1006	170	4			
9	Cover—gearbox remote control	HZA266	171	1			
10	Screw—cover to tunnel	HZS0404	172	11			
11	Washer—spring	LWZ204	173	11			
12	Box—speedometer drive adaptor	1H3131	174	1			
13	Washer—adaptor to gearbox	3H550	175	1			

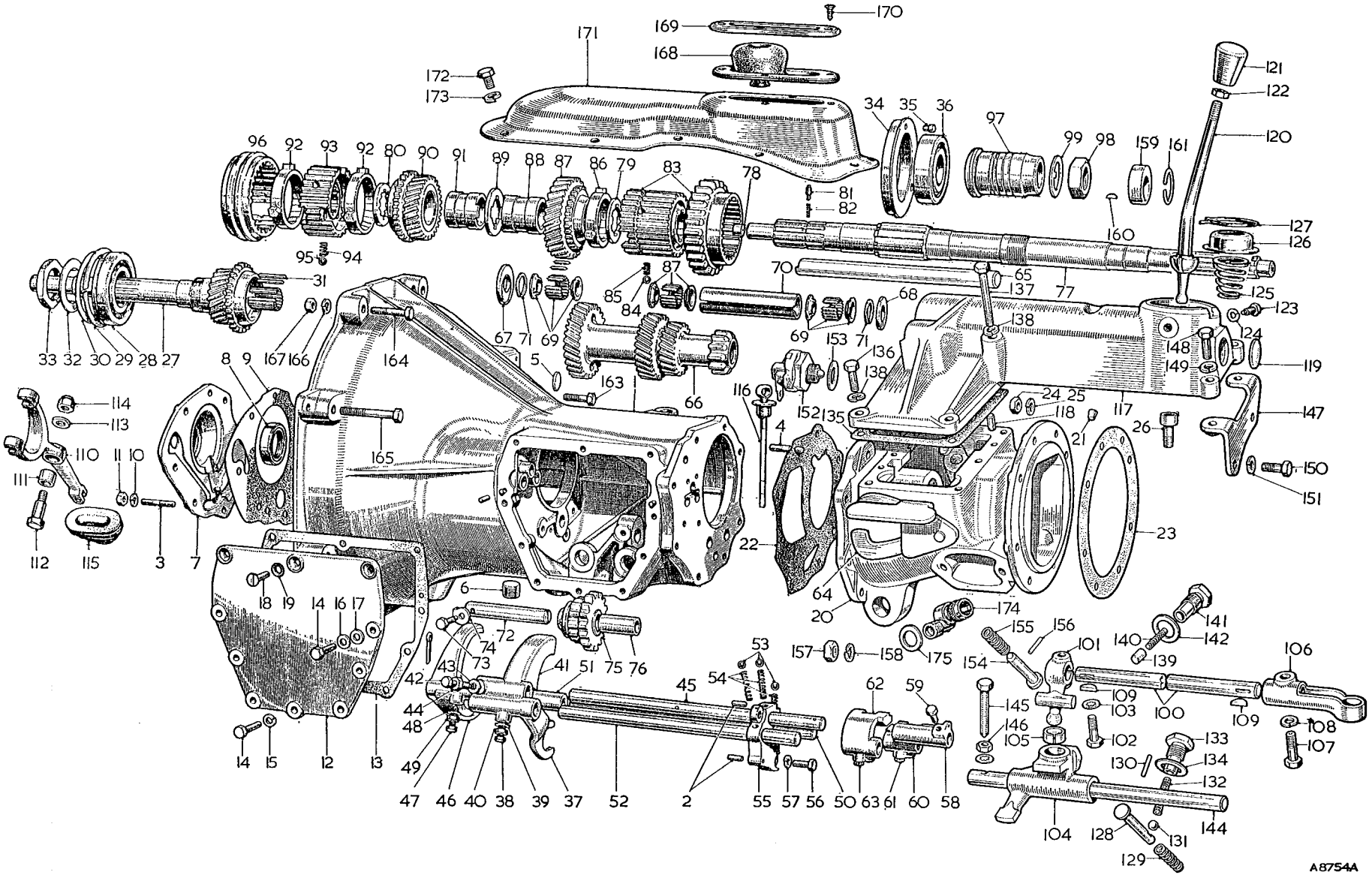

To face page F.14

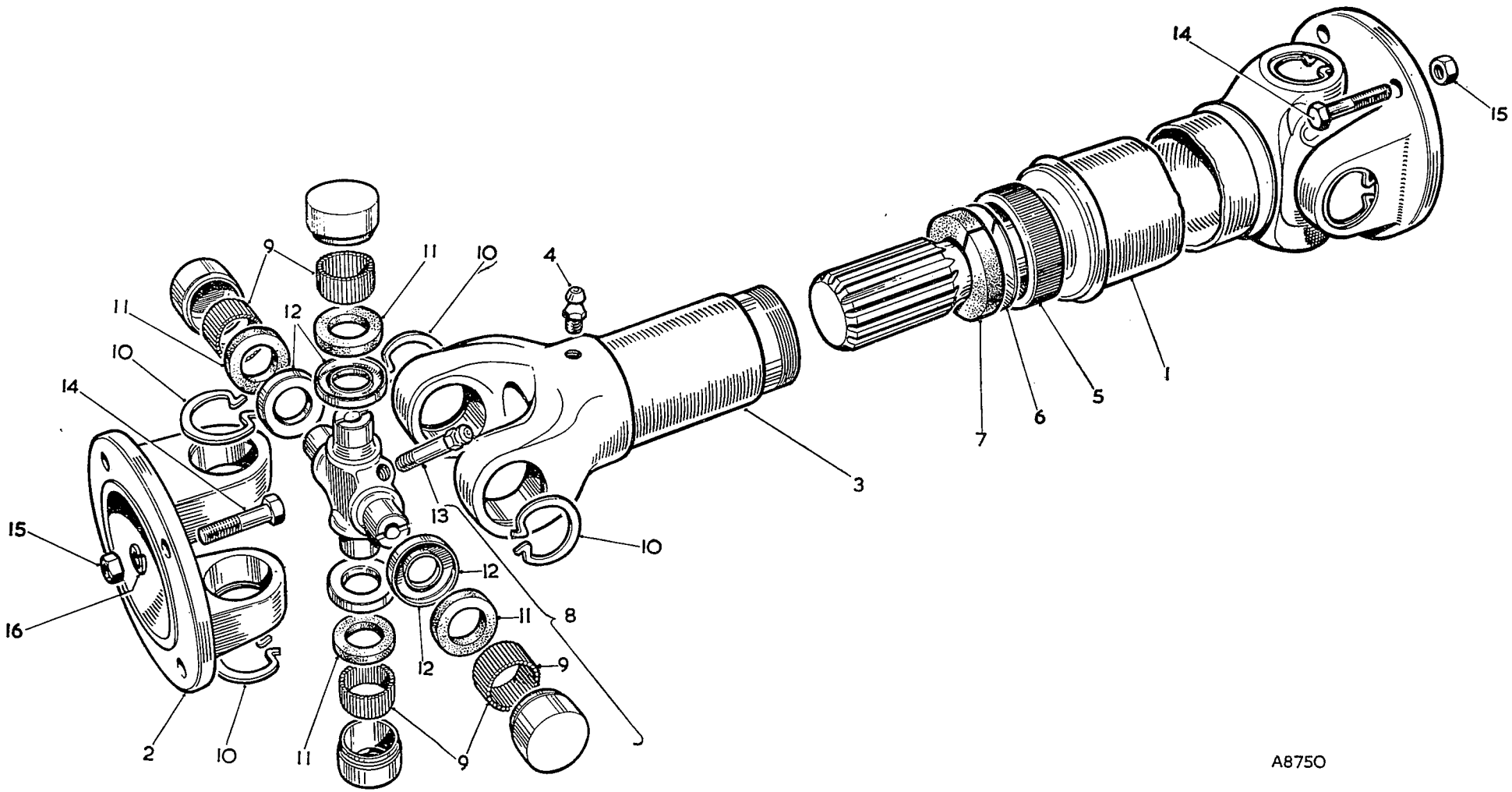
14
15
9
11
10
4
11
12
10
14
1
5
6
7
3
13
10
15
12
16
11
8
12
9
2
10
11
9
A8750

TRANSMISSION

PROPELLER SHAFT

Item No.	DESCRIPTION	Commencing (C) GHN3/101 Part Number	Illus. No.	Qty. per Veh.	MODIFICATIONS New Part Number	MODIFICATIONS Change Point	REMARKS
1	**Shaft assembly—propeller**	**AHH6481**	1	1			**Standard**
2	Shaft assembly—tubular	NSP		1			
3	Flange—yoke	7H3863	2	2			
4	**Sleeve assembly—yoke**	**7H3865**	3	1			
5	Lubricator	UHN400	4	1			
6	Cap—dust	7H3878	5	1			
7	Washer—dust cap (steel)	7H3879	6	1			
8	Washer—dust cap (cork)	7H3880	7	1			
9	**Journal assembly**	**8G8183**	8	2			
10	Journal	NSP		2			
11	Bearing assembly—needle	17H3955	9	8			
12	Circlip	7H3877	10	8			
13	Gasket	17H3818	11	8			
14	Retainer—gasket	17H3819	12	8			
15	Lubricator—journal	7H3858	13	2			
16	Bolt—shaft to pinion flange (front and rear)	185393	14	8			
17	Nut—bolt	LNZ105	15	8			
18	Washer—spring—front bolt	LWZ205	16	4			

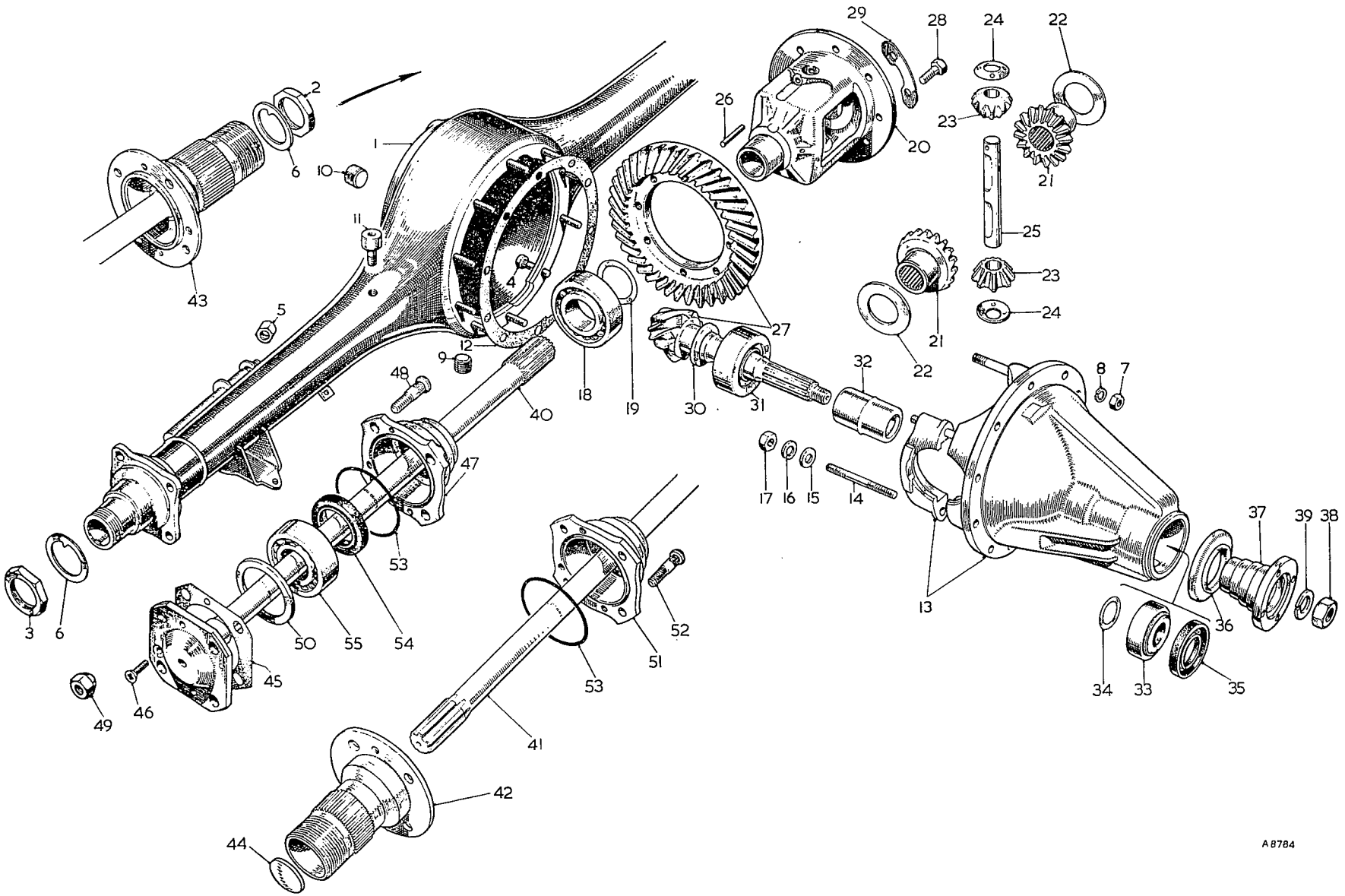
1
2
3
4
5
6
7
8
9
10
11
12
13
14
15
16
17
18
19
20
21
22
23
24
25
26
27
28
29
30
31
32
33
34
35
36
37
38
39
40
41
42
43
44
45
46
47
48
49
50
51
52
53
54
55
A 8784

REAR AXLE AND SUSPENSION

Item No.	DESCRIPTION	Commencing (C) GHN3/101 Part Number	Illus. No.	Qty. per Veh.	MODIFICATIONS New Part Number	MODIFICATIONS Change Point	REMARKS
1	**Axle assembly**	**NSP**		1			
2	**Case assembly**	**BTB533**	1	1			**Disc wheels only**
3	**Case assembly**	**BTB534**		1			**Wire wheels only**
4	Nut—bearing retaining—RHT	1G7448	2	1			
5	Nut—bearing retaining—LHT	1G7582	3	1			
6	Stud—gear carrier	2A7226	4	10			
7	Nut—rebound spindle	FNZ106	5	2			
8	Washer—bearing retaining nut	1G7584	6	2			
9	Nut—gear carrier to axle case	FNZ105	7	10			
10	Washer—spring—nut	LWZ205	8	10			
11	Plug—drain	6K449	9	1			
12	Plug—filler	6K449	10	1			
13	Breather assembly	1H3364	11	1			
14	Joint—gear carrier to axle case	1G7465	12	1			
15	**Differential assembly—11/43**	**BTB414**		1			
16	**Carrier assembly**	**ATB7181**	13	1			
17	Stud—bearing cap	51K886	14	4			
18	Washer—plain—bearing cap	ATC7084	15	4			
19	Washer—spring—bearing cap	LWN307	16	4			
20	Nut—stud	FNN107	17	4			
21	Bearing—differential	2K6544	18	2			] Alternatives
22	Bearing—differential	2K8938		2			
23	Washer—bearing packing—·002″ (·051 mm.)	2K7993	19	A/R			
24	Washer—bearing packing—·003″ (·067 mm.)	ATB7239		A/R			
25	Washer—bearing packing—·004″ (·102 mm.)	2K7435		A/R			
26	Washer—bearing packing—·006″ (·152 mm.)	6K503		A/R			
27	Washer—bearing packing—·010″ (·254 mm.)	1G7600		A/R			
28	Cage—differential	BTB328	20	1			
29	Wheel—differential	BTB150	21	2			
30	Washer—thrust—differential wheel	ATB7072	22	2			
31	Pinion—differential	ATB7123	23	2			
32	Washer—thrust—differential pinion	1G7445	24	2			
33	Pin—pinion	1G7444	25	1			
34	Peg—pinion pin	6K842	26	1			
35	**Crown wheel and pinion 11/43**	**BTB314**	27	1			
36	Bolt—crown wheel to differential cage	ATA7043	28	8			
37	Lock washer—bolt	6K875	29	4			

Item No.	DESCRIPTION	Commencing (C) GHN3/101 Part Number	Illus. No.	Qty. per Veh.	MODIFICATIONS New Part Number	MODIFICATIONS Change Point	REMARKS
	Rear Axle and Suspension—*continued*						
1	Washer—pinion thrust—·126″ (3·20 mm.)	ATB7064	30	1			One used of selected size
2	Washer—pinion thrust—·124″ (3·15 mm.)	ATB7065		1			
3	Washer—pinion thrust—·122″ (3·10 mm.)	ATB7066		1			
4	Washer—pinion thrust—·120″ (3·05 mm.)	ATB7067		1			
5	Washer—pinion thrust—·118″ (3·00 mm.)	ATB7068		1			
6	Washer—pinion thrust—·116″ (2·95 mm.)	ATB7069		1			
7	Washer—pinion thrust—·114″ (2·90 mm.)	ATB7070		1			
8	Washer—pinion thrust—·112″ (2·85 mm.)	ATB7071		1			
9	**Bearing—pinion—inner**	**6K287**	**31**	**1**			
10	Spacer—bearing	1B7240	32	1			
11	**Bearing—pinion—outer**	**2A7213**	**33**	**1**			
12	Shim—outer bearing—·004″ (·102 mm.)	ATB7102	34	A/R			
13	Shim—outer bearing—·006″ (·152 mm.)	ATB7103		A/R			
14	Shim—outer bearing—·008″ (·203 mm.)	ATB7104		A/R			
15	Shim—outer bearing—·010″ (·245 mm.)	ATB7105		A/R			
16	Shim—outer bearing—·012″ (·304 mm.)	ATB7106		A/R			
17	Shim—outer bearing—·020″ (·508 mm.)	ATB7107		A/R			
18	Shim—outer bearing—·030″ (·762 mm.)	ATB7108		A/R			
19	Seal—oil	ATA7047	35	1			
20	Cover—dust	1G7439	36	1			
21	Flange—universal joint	ATB7059	37	1			
22	Nut—pinion	FNZ612	38	1			
23	Washer—spring—nut	LWZ212	39	1			
24	**Shaft—axle**	**BTB336**	**40**	**2**			**Disc wheels only**
25	**Shaft—axle**	**BTB153**	**41**	**2**			
26	Hub extension—RH	BTB332	42	1			Wire wheels only
27	Hub extension—LH	BTB333	43	1			
28	Plug—welch—hub extension	2K8160	44	2			
29	Joint—shaft to hub	BTB337	45	2			
30	Screw—countersunk—shaft to hub	CMZ0410	46	2			
31	**Hub assembly**	**BTB334**	**47**	**2**			
32	Stud—wheel	BTB207	48	8			Disc wheels only
33	Nut—wheel stud	BTB354	49	8			
34	Spacer—bearing	1G7436	50	2			
35	**Hub assembly**	**BTB335**	**51**	**2**			
36	Stud—wheel	BTB253	52	8			Wire wheels only
37	Ring—oil seal	ATB7354	53	2			
38	Seal—oil	8G555	54	2			
39	Bearing—hub	2K7477	55	2			

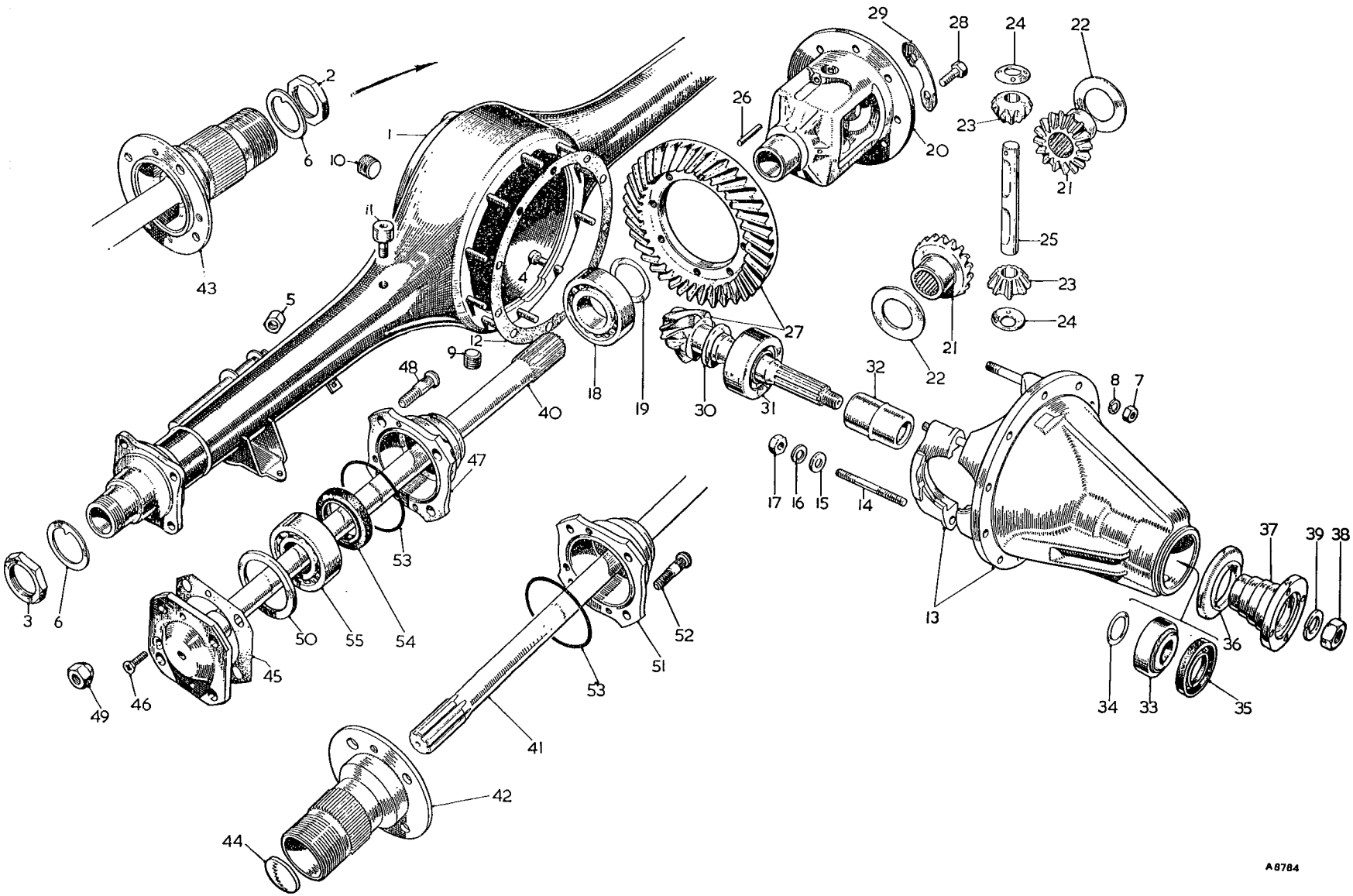

To face page H.2

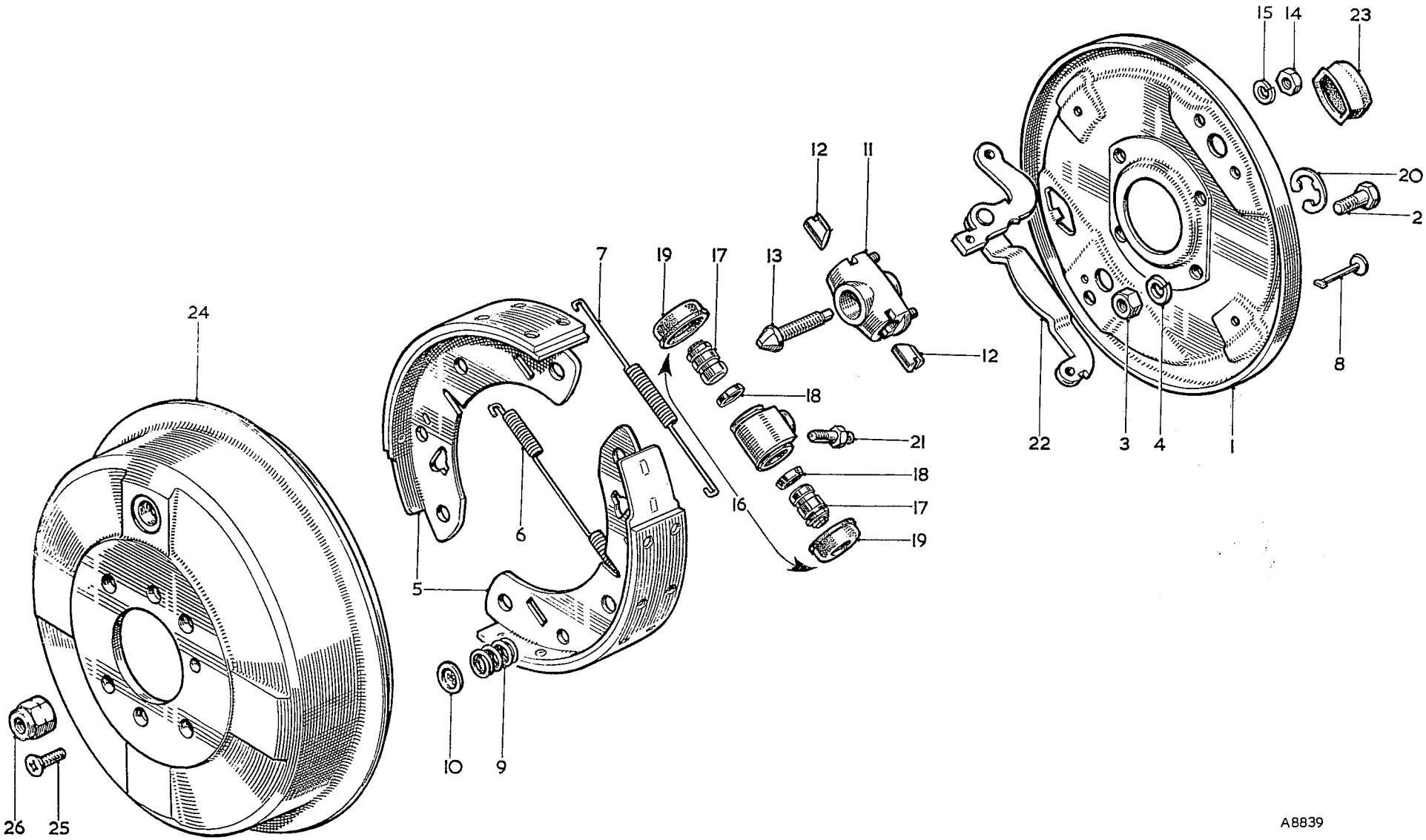

To face page H.3

Item No.	DESCRIPTION	Commencing (C) GHN3/101 Part Number	Illus. No.	Qty. per Veh.	MODIFICATIONS New Part Number	MODIFICATIONS Change Point	REMARKS
	REAR BRAKES						
1	**Plate—brake—RH**	**BTB366**	1	1			
2	**Plate—brake—LH**	**BTB367**		1			
3	Bolt—brake-plate to axle case	51K1380	2	8			
4	Nut—bolt	FNZ106	3	8			
5	Washer—spring—nut	LWZ206	4	8			
6	**Shoe assembly—brake**	**8G8675**	5	**2 sets**			
7	**Lining with rivets**	**8G8307**		**1 box**			
8	Rivet	7H7398		48			
9	Spring—pull-off—cylinder end—RH	17H7994	6	1			
10	Spring—pull-off—cylinder end—LH	17H7995		1			
11	Spring—pull-off—adjuster end	17H7996	7	2			
12	Pin—brake-shoe steady	17H7993	8	4			
13	Spring—brake-shoe steady	17H7969	9	4			
14	Washer—retainer—brake-shoe steady spring	17H7971	10	4			
15	**Adjuster assembly**	**17H7974**	**11**	2			
16	Body	NSP		2			
17	Tappet	17H7972	12	4			
18	Wedge	17H7973	13	2			
19	Nut—adjuster to brake-plate	FNZ104	14	4			
20	Washer—spring—nut	LWZ204	15	4			
21	**Cylinder assembly—wheel**	**17H7986**	**16**	2			
22	Body	NSP		2			
23	Piston	17H7998	17	4			
24	Seal—piston	7H7504	18	4			
25	Boot	17H7511	19	4			
26	Clip—spring—wheel cylinder retaining	17H7949	20	2			
27	Screw—bleeder	17H7623	21	2			
28	Lever—hand brake—RH	17H7991		1			
29	Lever—hand brake—LH	17H7992	22	1			
30	Boot—hand brake lever	17H7997	23	2			
31	**Drum—brake**	**BTB338**	**24**	2	✓		
32	Screw—drum to hub	CMZ0410	25	4			Disc wheels only
33	Nut—drum retaining	BTB157	26	8			Wire wheels only
34	**Kit—wheel cylinder repair**	**8G8674**		2			
35	Seal			4			
36	Boot			4			
37	Boot—hand brake lever			2			

REAR SPRING

Item No.	DESCRIPTION	Commencing (C) GHN3/101 Part Number	Illus. No.	Qty. per Veh.	MODIFICATIONS New Part Number	MODIFICATIONS Change Point	REMARKS
1	**Spring assembly**	**AHH6453**		2			
2	**Leaf assembly—main**	**AHH6454**	1	2			
3	Bush	AHH6446	2	2			
4	Leaf—second	AHH6456	3	2			
5	Bolt—locating	AHH6463	4	2			
6	Distance piece	ACA5000	5	2			
7	Nut—bolt	FNZ105	6	2			
8	Locknut—bolt	FNZ205	7	2			
9	Clip—third leaf	AHH5467	8	4			
10	Clip—fourth leaf	AHH5470	9	4			
11	Plate—shackle and pins	AHH5018	10	2			
12	Plate—shackle	AHH5019	11	2			
13	Bush—shackle plate (rubber)	AHH5016	12	8			
14	Nut—shackle plate pin	FNZ106	13	4			
15	Washer—spring—nut	LWZ206	14	4			
16	Clip—'U'—rear spring	AHH6452	15	4			
17	Nut—'U'-clip	FNZ106	16	16			
18	Pedestal—bump rubber	AHH6053	17	2			
19	Plate—spring locating	ACG5001	18	4			
20	Pad—spring seating	ACG5002	19	4			
21	Bracket—shock absorber to rear spring—RH	AHH5067	20	1			
22	Bracket—shock absorber to rear spring—LH	AHH5068		1			
23	Bolt—spring—front end	HBZ0724	21	2			
24	Nut—bolt	FNZ107	22	2			
25	Washer—spring—nut	LWZ207	23	2			
26	Strap—rebound	AHH6355	24	2			
27	Distance tube—rebound strap	AHH6162	25	2			
28	Nut—rebound strap to axle	FNZ106	26	2			
29	Washer—plain—nut	PWZ206	27	2			
30	Washer—spring—nut	LWZ206	28	2			
31	Bolt—strap to bracket	HBZ0514	29	2			
32	Nut—bolt	FNZ105	30	2			
33	Washer—spring—nut	LWZ205	31	2			
34	Bump rubber	AHH6147	32	2			

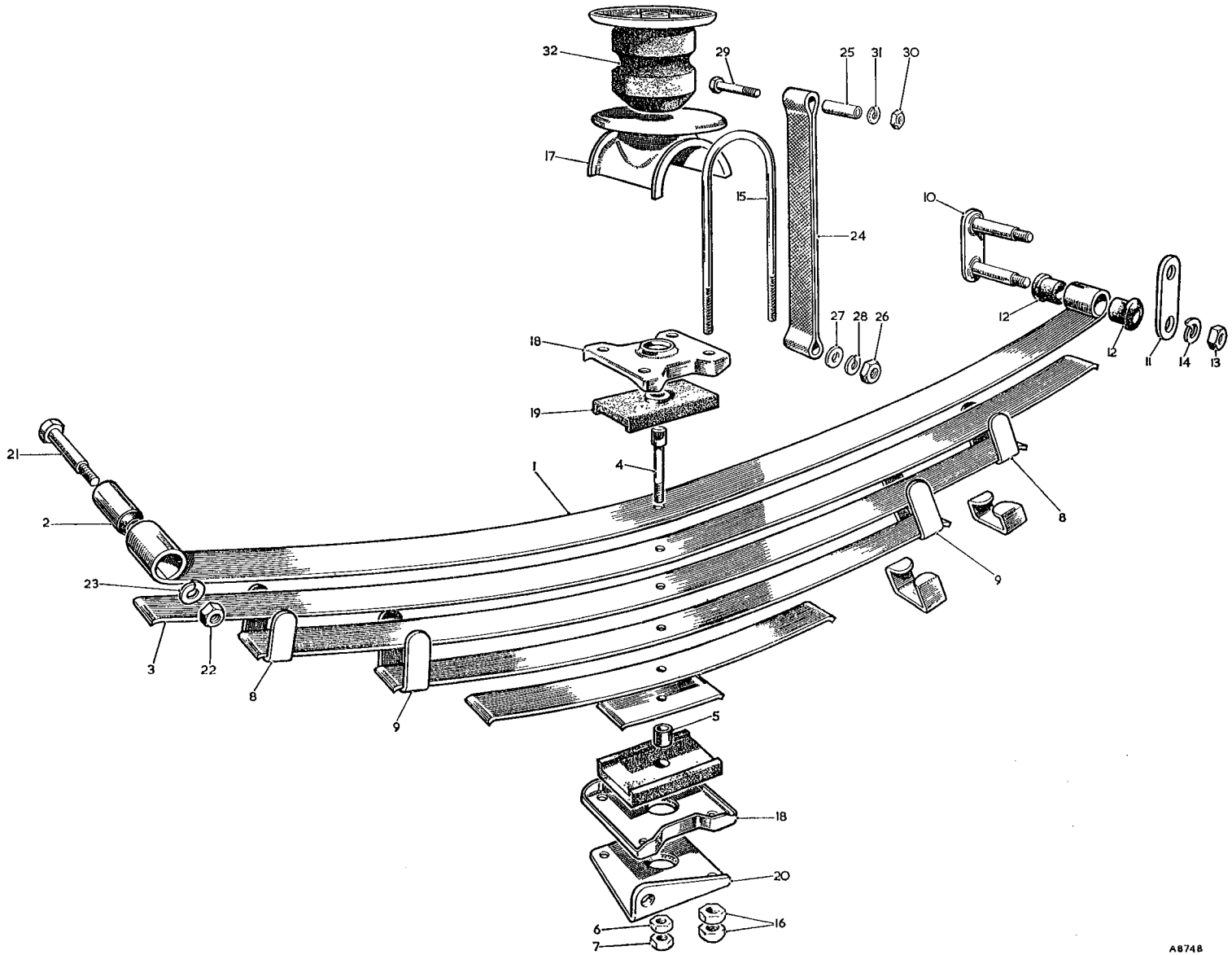

To face page H.4

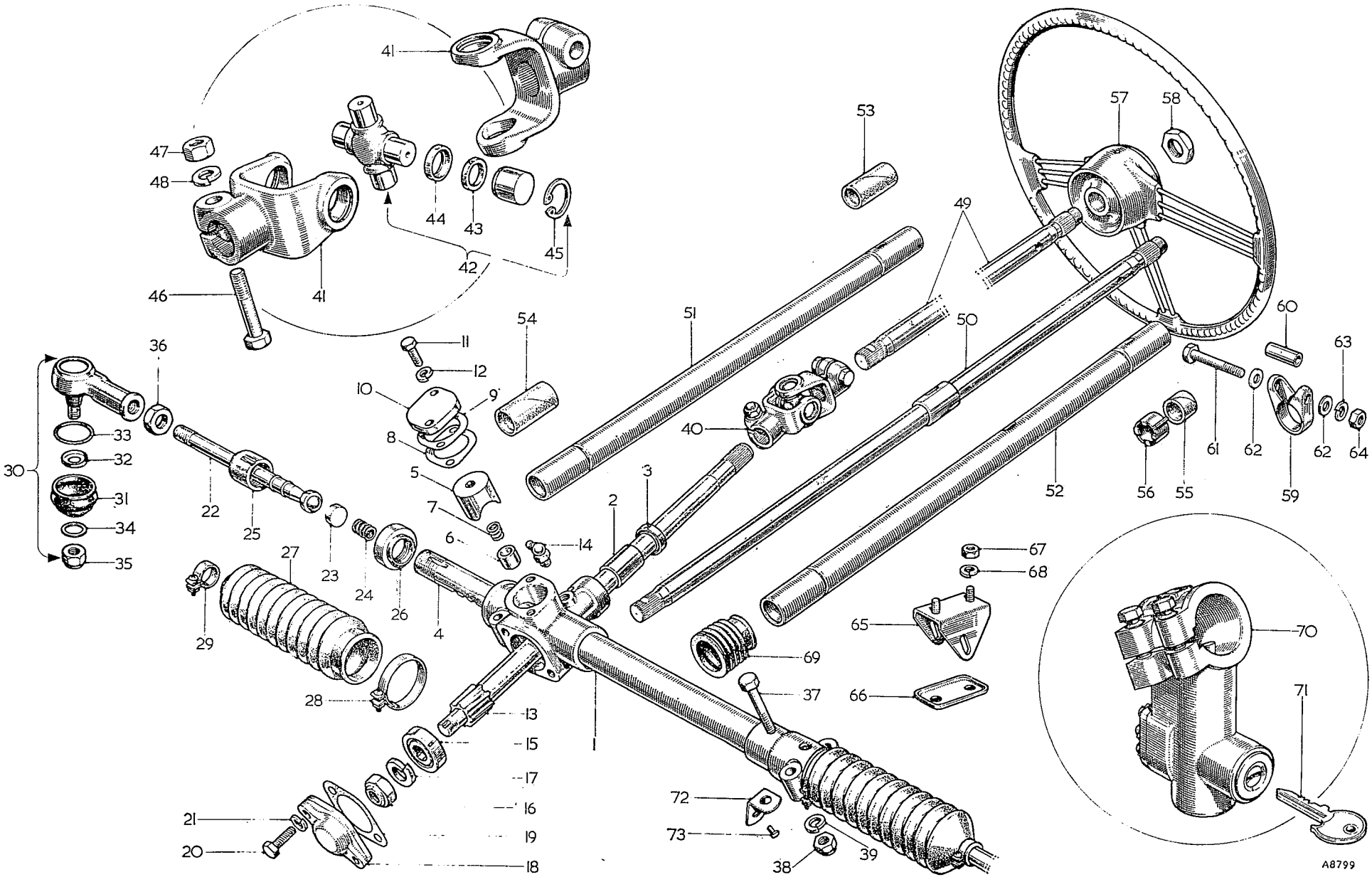

To face page J.1

STEERING

Item No.	DESCRIPTION	Commencing (C) GHN3/101 Part Number	Illus. No.	Qty. per Veh.	MODIFICATIONS New Part Number	MODIFICATIONS Change Point	REMARKS
1	**Rack assembly** ..... **RHD**	**AHH6091**		1			
2	**Rack assembly** ..... **LHD**	**AHH6121**		1			
3	**Housing assembly** ..... **RHD**	**17H6588**	1	1			
4	**Housing assembly** ..... **LHD**	**17H6589**		1			
5	Bush—pinion	17H6579	2	1			
6	Seal—oil	17H6560	3	1			
7	Rack	17H6570	4	1			
8	Yoke—rack support	17H6582	5	1			
9	Pad—damper	ACA5244	6	1			
10	Spring—damper pad	17H6583	7	1			
11	Shim—cover-plate ·0024″ (·0609 mm.)	17H6566	8	A/R			
12	Shim—cover-plate ·005″ (·127 mm.)	17H6567		A/R			
13	Shim—cover-plate ·010″ (·254 mm.)	17H6568		A/R			
14	Joint—cover-plate	17H6584	9	1			
15	Plate—cover—yoke	17H6580	10	1			
16	Bolt—cover-plate	ZCS0507	11	2			
17	Washer—spring—bolt	LWZ205	12	2			
18	**Pinion**	**17H6575**	13	1			
19	Lubricator—pinion shaft	UHN305	14	1			
20	Bearing—ball—pinion	17H6561	15	1			
21	Nut—pinion—bearing	17H6562	16	1			
22	Washer—spring—nut	LWZ210	17	1			
23	Cover—end	17H6563	18	1			
24	Joint—end cover	17H6564	19	1			
25	Bolt—end cover	HCZ0510	20	2			
26	Washer—spring—bolt	LWZ205	21	2			
27	Rod—tie	17H6572	22	2			
28	Seat—ball	17H6571	23	2			
29	Spring—thrust—ball seat	17H6290	24	2			
30	Housing—ball	17H6573	25	2			
31	Locknut—ball housing	17H6574	26	2			
32	Seal—rack	17H6569	27	2			
33	Clip—inner—seal	ADG1682	28	2			
34	Clip—outer—seal	~~2H2068~~	29	2	ACH 8854		
35	**Socket assembly—ball**	**17H3500**	30	2			
36	Boot	17H3501	31	2			
37	Retainer—boot	17H3502	32	2			
38	Spring—garter	17H3503	33	2			
39	Washer—boot	17H3513	34	2			
40	Nut—ball pin	17H7933	35	2			
41	Locknut	31K5558	36	2			

Item No.	DESCRIPTION	Commencing (C) GHN3/101 Part Number	Illus. No.	Qty. per Veh.	MODIFICATIONS New Part Number	MODIFICATIONS Change Point	REMARKS
	Steering—*continued*						
1	Bolt—rack to bracket	HBZ0516	37	4			
2	Nut—bolt	LNZ205	38	2			
3	Washer—spring	LWZ205	39	4			
4	**Joint—universal—steering column**	**AHH6000**	**40**	**1**			
5	Yoke	17H3925	41	2			
6	**Journal assembly**	**17H3873**	**42**	**1**			
7	Joint—journal	17H3874	43	4			
8	Retainer—joint	17H3875	44	4			
9	Circlip	CCN212	45	4			
10	Bolt—universal joint	HBZ0513	46	2			
11	Nut—bolt	FNZ105	47	2			
12	Washer—spring—nut	LWZ205	48	2			
13	Column assembly—inner	17H6577	49	1			
14	Column assembly—inner **RHD**	7H6972	50	1			] When steering lock is fitted
15	Column assembly—inner **LHD**	7H6971		1			
16	Tube—column—outer	17H6578	51	1			
17	Tube—column—outer **RHD**	7H6969	52	1			] When steering lock is fitted
18	Tube—column—outer **LHD**	7H6970		1			
19	Bearing—upper—column	21A979	53	1			
20	Bearing—lower—column	17H6565	54	1			
21	Bush (felt)	13H569	55	1			
22	Clip—retaining	13H568	56	1			] When steering lock is fitted
23	**Wheel—steering**	**AHH6310**	**57**	**1**			
24	Nut—steering wheel	ACH6001	58	1			
25	Clamp—steering column	AHH6005	59	2			
26	Distance piece	AHH6006	60	2			
27	Bolt—clamp	HBZ0518	61	2			
28	Washer—plain—clamp bolt	PWZ105	62	4			
29	Washer—spring—clamp bolt	LWZ205	63	2			
30	Nut—bolt	FNZ105	64	2			
31	Bracket—lower—steering-column	AHH6311	65	1			
32	Plate—blanking—bracket	AHH6312	66	1			
33	Nut—bracket to body	FNZ105	67	2			
34	Washer—spring—nut	LWZ205	68	2			
35	Excluder—draught—column to bulkhead	AHA5435	69	1			
36	**Lock assembly—steering and ignition**	**ACB9425**	**70**	**1**			
37	Key	97H2797	71	2			Always quote car or key number

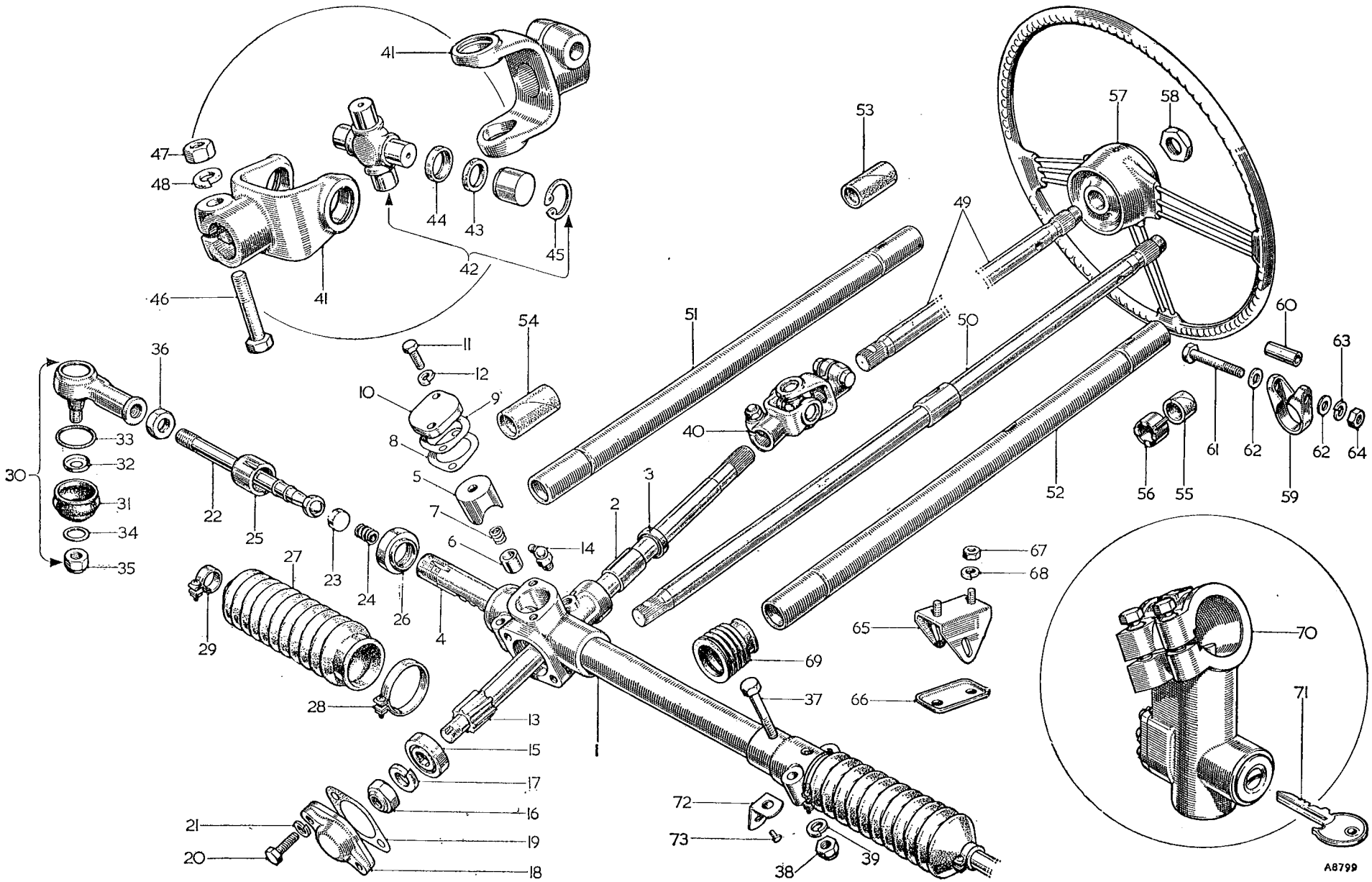

To face page J.2

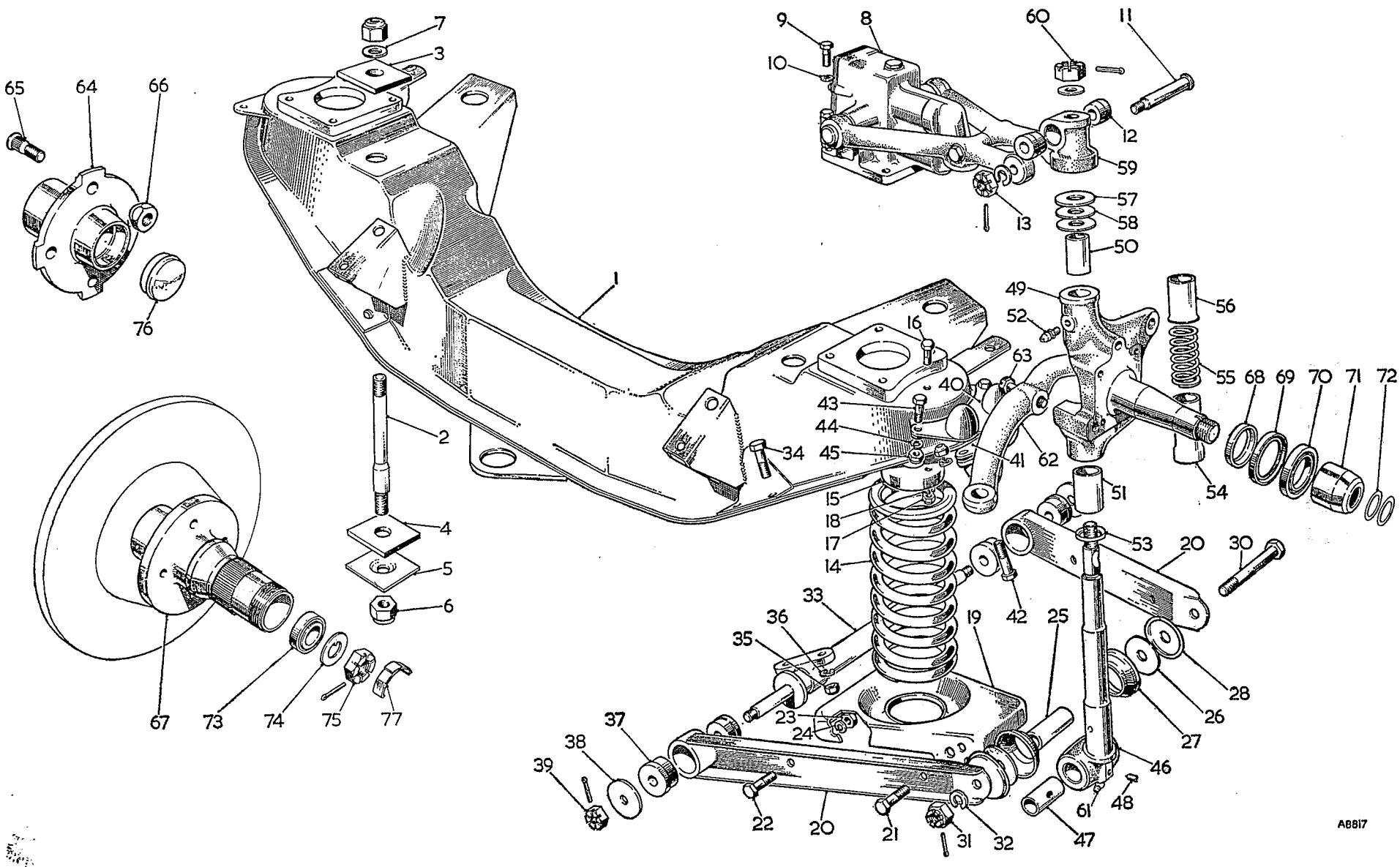

To face page K.1

FRONT SUSPENSION

Item No.	DESCRIPTION	Commencing (C) GHN3/101 Part Number	Illus. No.	Qty. per Veh.	MODIFICATIONS New Part Number	MODIFICATIONS Change Point	REMARKS
1	**Cross-member**	**AHH6195**	1	1			
2	Bolt—cross-member to body	AHH6204	2	4			
3	Pad—mounting—upper (rubber)	AHH6205	3	4			
4	Pad—mounting—lower (rubber)	AHH6206	4	4			
5	Plate—clamp	AHH6207	5	4			
6	Nut—mounting bolt	LNZ108	6	8			
7	Washer—plain—nut	PWZ108	7	4			
8	**Absorber—shock**	**AHH6124**	8	2			
9	Screw—shock absorber to cross-member	53K1025	9	8			
10	Washer—screw—spring	LWZ306	10	8			
11	Pin—fulcrum—top link to shock absorber arm	1G4349	11	2			
12	Bearing—link	8G621	12	4			
13	Nut—fulcrum pin	FNZ407	13	2			
14	**Spring—coil**	**AHH6451**	14	2			
15	Spigot—spring	AHH5897	15	2			
16	Screw—spigot to cross-member	HZS0405	16	4			
17	Nut—screw	FNZ104	17	4			
18	Washer—spring—nut	LWZ204	18	4			
19	Pan assembly—spring	AHH5925	19	2			
20	Wishbone assembly—bottom	126908	20	4			
21	Screw—spring—pan to wishbone	HZS0507	21	4			
22	Screw—spring—pan to wishbone	HZS0508	22	4			
23	Nut—screw	FNZ105	23	8			
24	Washer—spring—nut	LWZ205	24	8			
25	Tube—distance—link	126900	25	2			
26	Washer—thrust—link	127657	26	4			
27	Seal—link	126902	27	4			
28	Support—link—seal	126903	28	4			
29	Nut—wishbone pivot	FNZ408	29	4			
30	Bolt—wishbone to link	AHH4001	30	2			
31	Nut—bolt	FNZ308	31	2			
32	Washer—spring—nut	LWZ208	32	2			

Item No.	DESCRIPTION	Commencing (C) GHN3/101 Part Number	Illus. No.	Qty. per Veh.	MODIFICATIONS New Part Number	MODIFICATIONS Change Point	REMARKS
	Front Suspension—*continued*						
1	Pivot—wishbone	AHH4003	33	2			
2	Bolt—pivot to member	ACB5255	34	8			
3	Nut—bolt	LNZ106	35	8			
4	Washer—spring—nut	LWZ206	36	8			
5	Bush—wishbone	126914	37	8			
6	Washer—wishbone pivot	126915	38	4			
7	Nut—wishbone pivot	FNZ408	39	4			
8	Buffer—rebound	AHH6514	40	2			
9	Distance piece	500823	41	2			
10	Bolt—rebound buffer to cross-member	HBZ0512	42	4			
11	Screw—rebound buffer to cross-member	HZS0506	43	4			
12	Washer—spring	LWZ205	44	8			
13	Nut	FNZ105	45	8			
14	**Front suspension assembly—RH**	**NSP**		1			
15	**Front suspension assembly—LH**	**NSP**		1			
16	**Pin—swivel**	**BTB411**	46	2			
17	Bush—swivel pin	ACG6005	47	2			
18	Screw—grub—swivel pin	BTB350	48	2			
19	**Axle assembly—swivel—RH**	**BTB392**	49	1			
20	**Axle assembly—swivel—LH**	**BTB393**		1			
21	Bush—swivel—top	ATC4246	50	2			
22	Bush—swivel—bottom	ATC4247	51	2			
23	Lubricator—swivel bush	UHN400	52	2			
24	Ring—swivel axle pin (cork)	ATC4248	53	2			
25	Tube—dust excluder—bottom	ATC4240	54	2			
26	Spring—dust excluder	2K8951	55	2			
27	Tube—dust excluder—top	1G4271	56	2			
28	Washer—thrust	ATC4264	57	2			
29	Washer—floating thrust ·052 to ·057″ (1·32 to 1·44 mm.)	ATC4261	58	A/R			
30	Washer—floating thrust ·058 to ·063″ (1·47 to 1·60 mm.)	ATC4262		A/R			
31	Washer—floating thrust ·064 to ·069″ (1·62 to 1·75 mm.)	ATC4263		A/R			

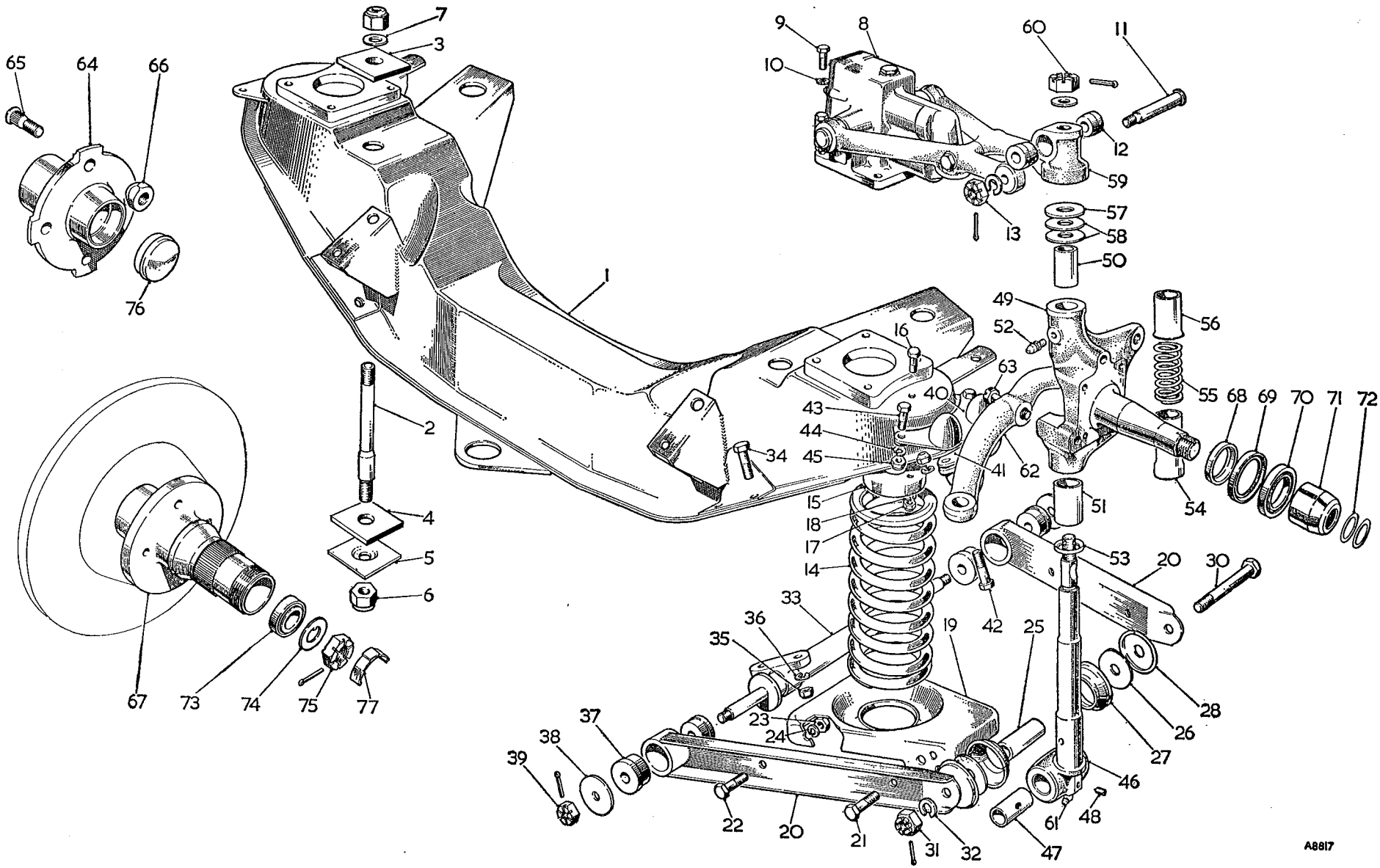

To face page K.2

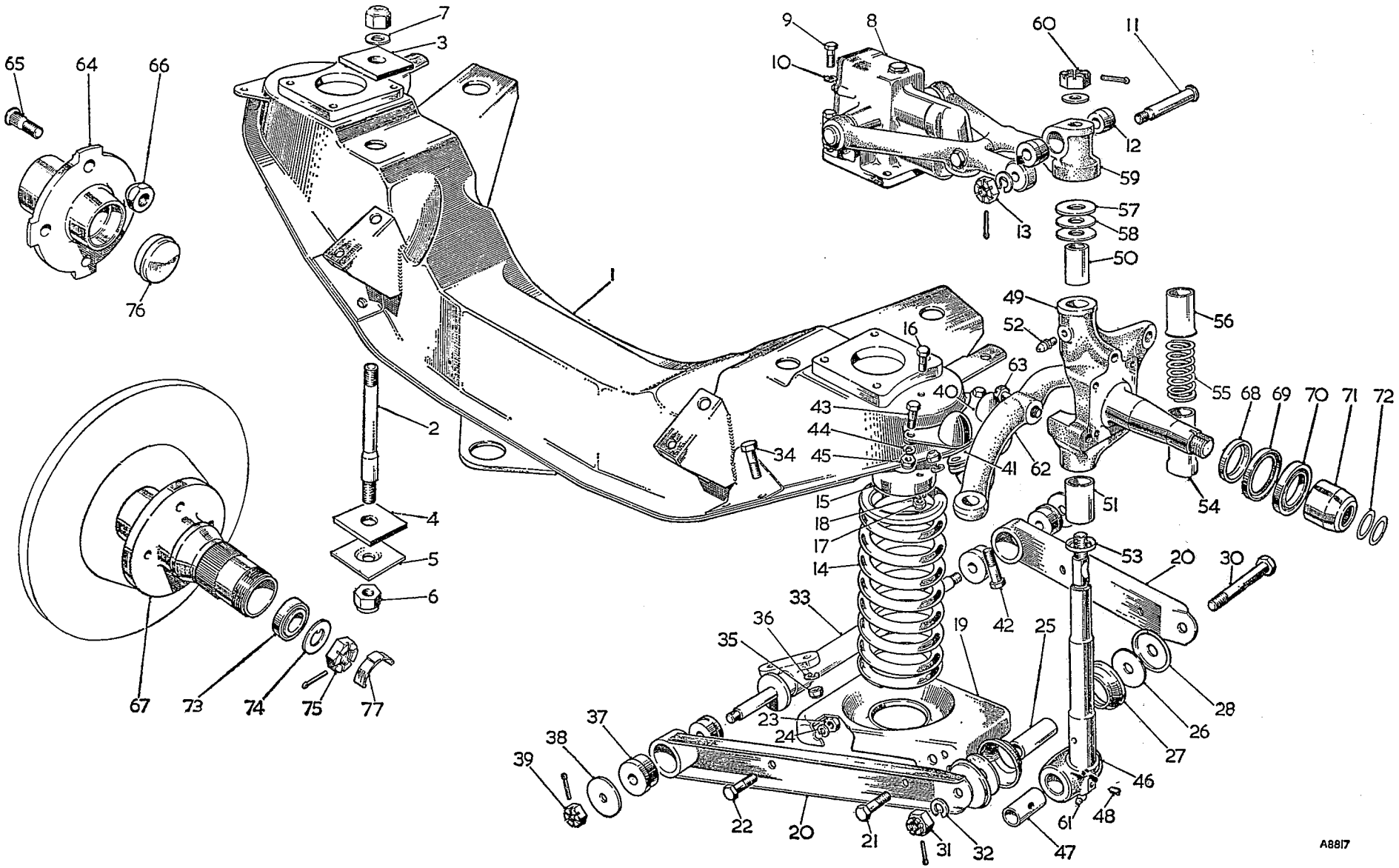

To face page K.3

Item No.	DESCRIPTION	Commencing (C) GHN3/101 Part Number	Illus. No.	Qty. per Veh.	MODIFICATIONS New Part Number	MODIFICATIONS Change Point	REMARKS
	Front Suspension—*continued*						
1	Trunnion—suspension link	ATC4240	59	2			
2	Nut—swivel axle pin	ATC4265	60	2			
3	Lubricator—swivel pin	UHN445	61	2			
4	Lever—steering—RH	BTB396	62	1			
5	Lever—steering—LH	BTB397		1			
6	Bolt—steering lever to swivel axle	BTB410	63	4			
7	**Hub assembly**	**BTB361**	64	2			Disc wheels only
8	Stud—wheel	BTB187	65	8			
9	Nut—wheel stud	BTB354	66	8			
10	**Hub assembly—RH**	**BTB346**	67	1			**Wire wheels only**
11	**Hub assembly—LH**	**BTB347**		1			
12	Collar—oil seal	BTB183	68	2			
13	Seal—oil	13H106	69	2			
14	Bearing for hub—inner	BTC280	70	2			
15	Spacer—bearing	ATB4239	71	2			
16	Shim—·003″ (·076 mm.)	ATB4240	72	A/R			
17	Shim—·005″ (·127 mm.)	ATB4241		A/R			
18	Shim—·010″ (·254 mm.)	ATB4242		A/R			
19	Bearing—hub—outer	ATB4238	73	2			
20	Washer—bearing retaining	1A4742	74	2			
21	Nut—bearing retaining	51K330	75	2			
22	Cup—grease retaining	2A4067	76	2			Disc wheels only
23	Cup—grease retaining	ATB4131	77	2			Wire wheels only

Item No.	DESCRIPTION	Commencing (C) GHN3/101 Part Number	Illus. No.	Qty. per Veh.	MODIFICATIONS New Part Number	MODIFICATIONS Change Point	REMARKS
	Front Suspension—*continued*						
1	**Disc—brake**	**BTB387**	1	2			
2	Bolt—disc to hub	BTB198	2	8			
3	Washer—spring—bolt	LWZ206	3	8			
4	Nut—bolt	FNZ506	4	8			
5	Cover—dust—brake disc—RH	BTB412	5	1			
6	Cover—dust—brake disc—LH	BTB413		1			
7	Bolt—dust cover to swivel axle	HZS0504	6	8			
8	Washer—spring—bolt	LWZ205	7	8			
9	**Caliper unit assembly—RH**	**BTB370**		1			
10	**Caliper unit assembly—LH**	**BTB371**		1			
11	Caliper—RH	17H7987	8	1			
12	Caliper—LH	17H7988		1			
13	Piston	17H7989	9	4			
14	Seal—inner	17H7729	10	4			
15	Seal—dust—with retainer	17H7926	11	4			
16	**Pad assembly**	**8G8707**	12	**1 set**			
17	Pad	NSP		4			
18	Clip—pad retaining	17H7990	13	2			
19	Plug	17H7917	14	2			
20	Screw—bleeder	3H2428	15	2			
21	Bolt—caliper to swivel axle	ATB4074	16	4			
22	Washer—tab—bolt	BTC114	17	4			
23	**Kit—caliper repair**	**8G8641**		2			
24	Seal—inner			2			
25	Seal—dust—with retainer			2			

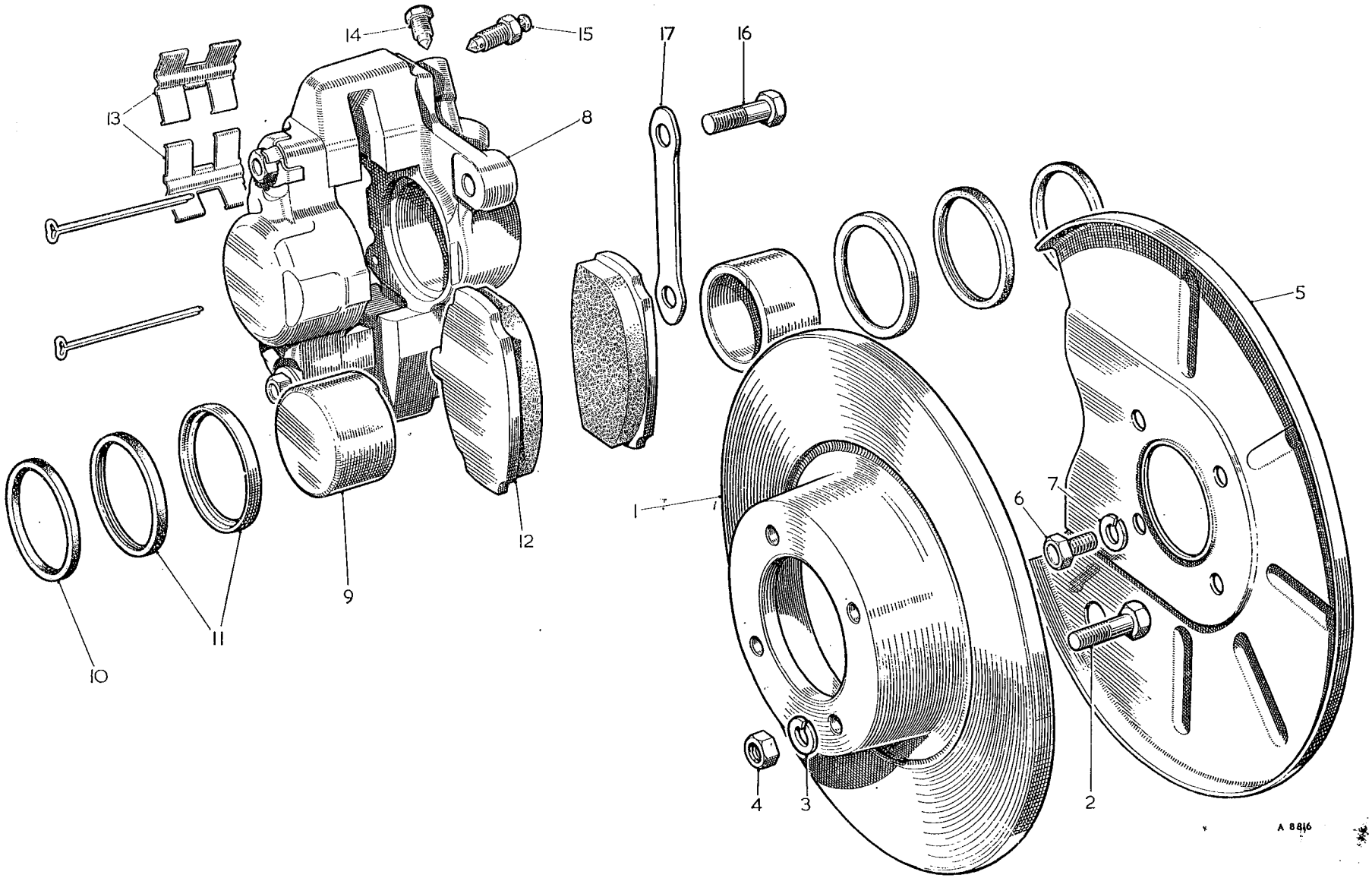

To face page K.4

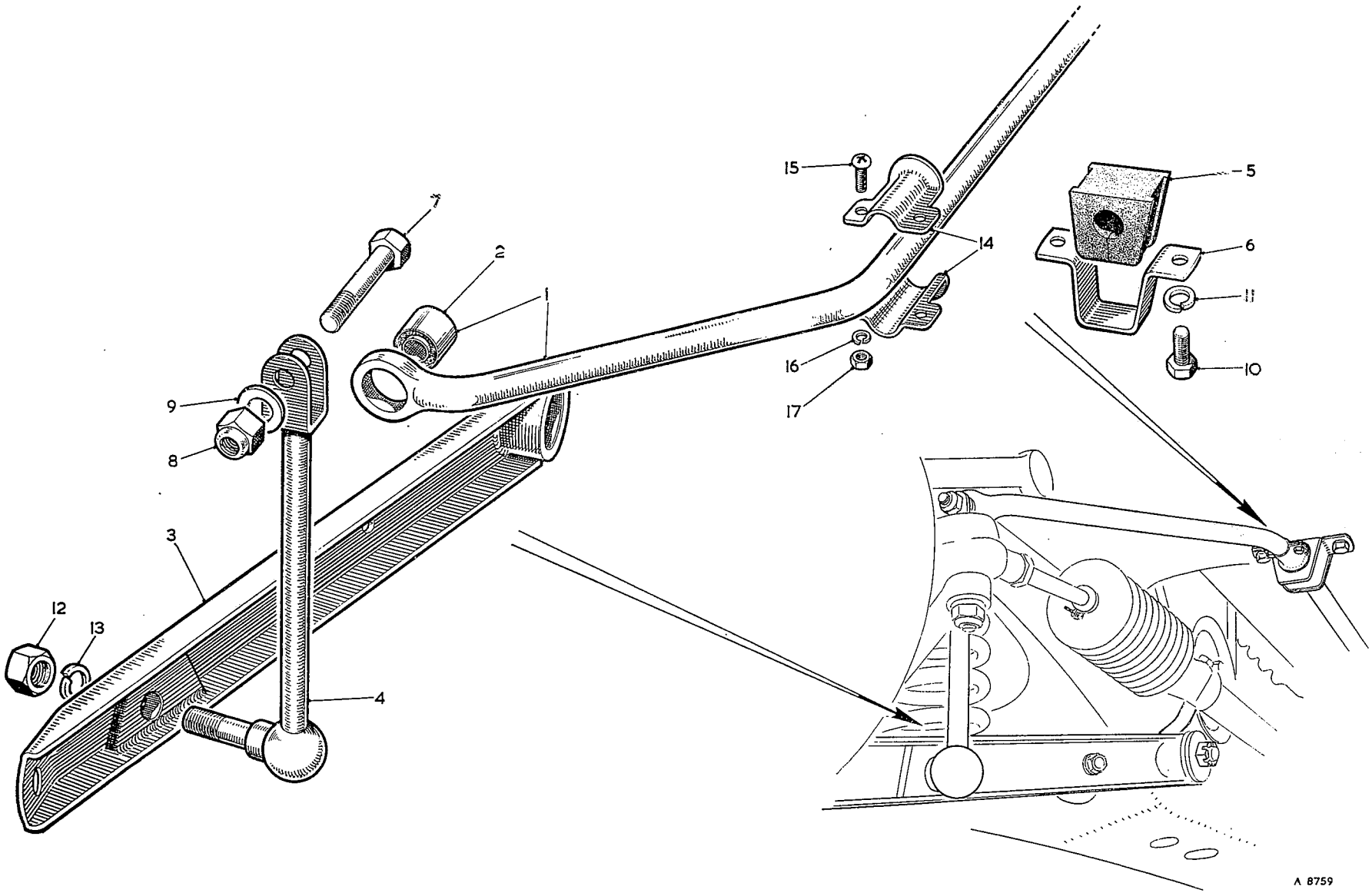

To face page K.5

Item No.	DESCRIPTION	Commencing (C) GHN3/101 Part Number	Illus. No.	Qty. per Veh.	MODIFICATIONS New Part Number	MODIFICATIONS Change Point	REMARKS
	ANTI-ROLL BAR						
1	**Bar assembly—anti-roll**	**AHH6542**	**1**	**1**			Optional extra
2	Bush	AHH5939	2	2			
3	Wishbone assembly—bottom—RH	AHH5927	3	1			
4	Wishbone assembly—bottom—LH	AHH5929		1			
5	Link—anti-roll bar—RH	AHH6543	4	1			
6	Link—anti-roll bar—LH	AHH6544		1			
7	Bearing—anti-roll bar	AHH6541	5	2			
8	Strap—bearing	1B7356	6	2			
9	Bolt—clamping—anti-roll bar to link	AHH5941	7	2			
10	Nut—bolt	LNZ107	8	2			
11	Washer—plain—nut	PWZ107	9	2			
12	Screw—strap to side-member	HZS0505	10	4			
13	Washer—spring—screw	LWZ205	11	4			
14	Nut—bottom wishbone to link	FNZ108	12	2			
15	Washer—spring—nut	LWZ208	13	2			
16	End—location stop	AHH6546	14	4			
17	Screw—location stop to anti-roll bar	PMZ0808	15	4			
18	Washer—spring—screw	LWZ203	16	4			
19	Nut—screw	FNZ103	17	4			

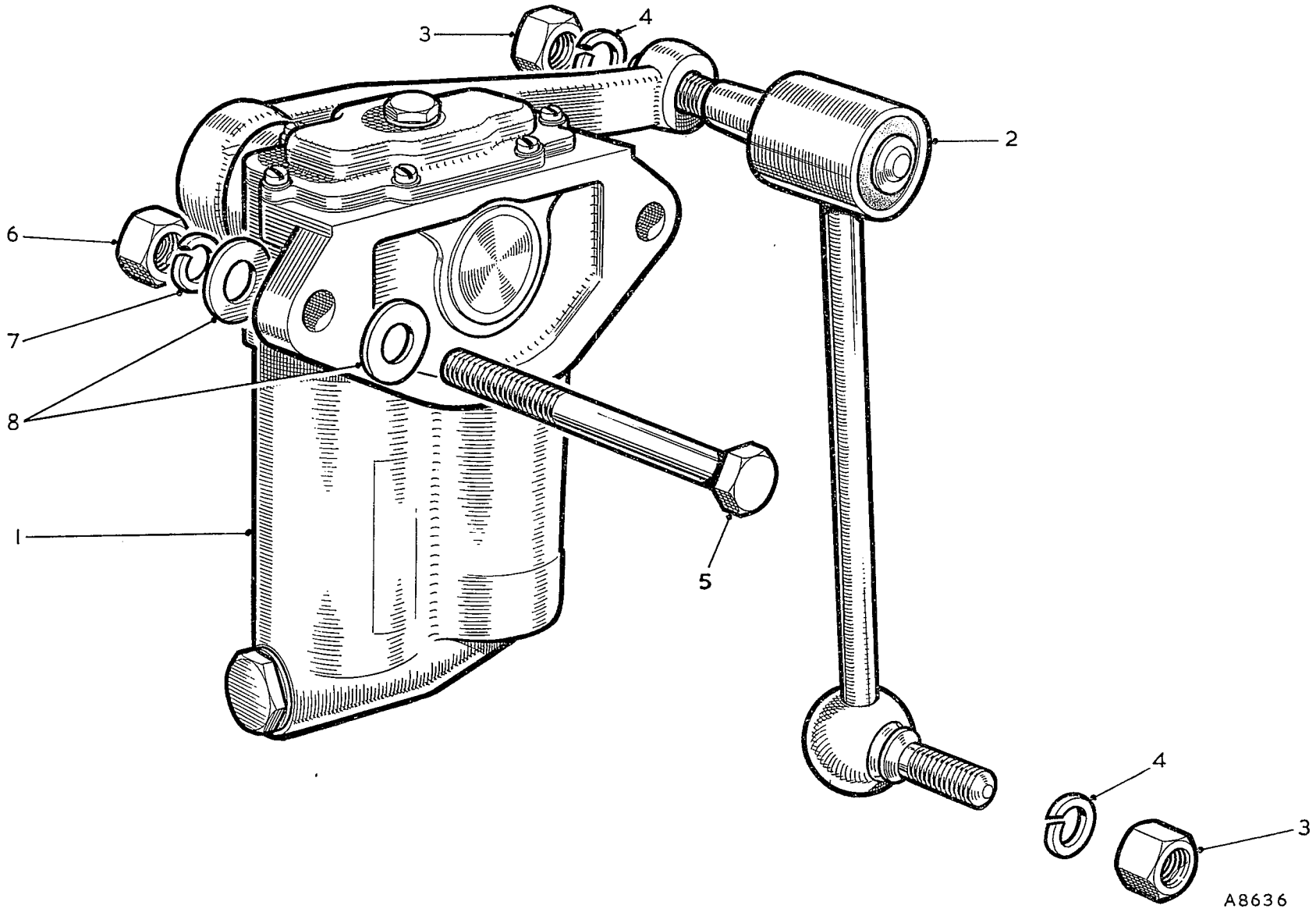

To face page L.1

SHOCK ABSORBERS

Item No.	DESCRIPTION	Commencing (C) GHN3/101 Part Number	Illus. No.	Qty. per Veh.	MODIFICATIONS New Part Number	MODIFICATIONS Change Point	REMARKS
1	**Shock absorber—front**						**See Section K**
2	**Shock absorber—rear—RH**	**AHH6047**		1			
3	**Shock absorber—rear—LH**	**AHH6048**	1	1			
4	Link—shock absorber	97H2031	2	2			
5	Nut—link to bracket	FNZ108	3	4			
6	Washer—spring—nut	LWZ208	4	4			
7	Bolt—shock absorber to frame	HBZ0726	5	4			
8	Nut—bolt	FNZ107	6	4			
9	Washer—spring—nut	LWZ207	7	4			
10	Washer—plain—nut	PWZ107	8	8			

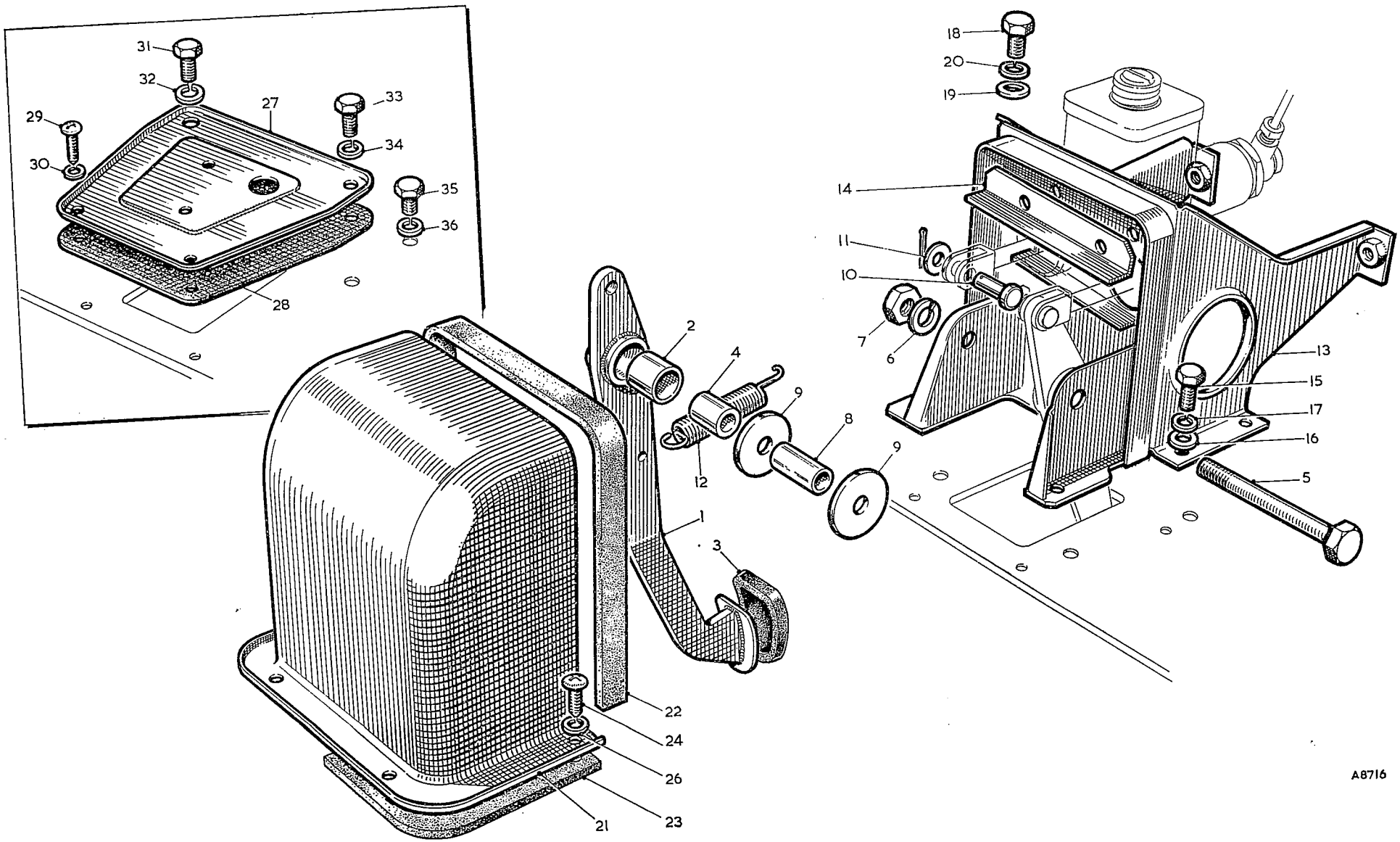
31
32
29
30
27
33
34
35
36
28
18
20
19
14
11
10
7
6
2
4
9
8
12
1
3
9
13
15
17
16
5
22
24
26
21
23
A8716

BRAKE CONTROLS

BRAKE PEDAL AND LINKAGE

Item No.	DESCRIPTION	Commencing (C) GHN3/101 Part Number	Illus. No.	Qty. per Veh.	MODIFICATIONS New Part Number	MODIFICATIONS Change Point	REMARKS
1	**Pedal—brake** ..... **RHD**	**AHH6153**	1	1			
2	**Pedal—brake** ..... **LHD**	**AHH6506**	1	1			
3	Bush	185794	2	1			
4	Pad—pedal (rubber)	AHH5100	3	1			
5	Tube—distance—brake pedal	185795	4	1			
6	Bolt—fulcrum—pedal to bracket	HBZ0632	5	1			
7	Washer—spring—bolt	LWZ206	6	1			
8	Nut—bolt	FNZ106	7	1			
9	Spacer—pedal fulcrum	AHH6063	8	1			
10	Washer—plain	PWZ206	9	2			
11	Pin—clevis—fork end to pedal	CLZ0514	10	1			
12	Washer—plain—pin	PWZ105	11	1			
13	Spring—pull-off	130154	12	1			
14	**Box assembly—master cylinder**	**AHH6065**	13	1			
15	Stiffener—master cylinder box	AHH6163	14	1			
16	Screw—box to bulkhead and platform	HZS0405	15	7			
17	Washer—plain—screw	PWZ104	16	7			
18	Washer—spring—screw	LWZ204	17	7			
19	Screw—box to bulkhead and platform	HZS0505	18	1			
20	Washer—plain—screw	PWZ105	19	1			
21	Washer—spring—screw	LWZ205	20	1			
22	Cover—master cylinder box	AHH6919	21	1			
23	Seal—cover	AHH6156	22	1			
24	Seal—cover—bottom	AHH6155	23	2			
25	Screw—cover to bulkhead	PMZ0308	24	3			
26	Screw—cover to bulkhead	PMZ0312	25	1			
27	Washer—spring	LWZ203	26	4			
28	Plate—blanking—master cylinder hole cover	AHH6510	27	1			
29	Seal—blanking plate	AHH6511	28	1			
30	Screw—blanking plate and seal to bulkhead	PMZ0308	29	2			
31	Washer—spring	LWZ203	30	2			
32	Screw—blanking plate and seal to bulkhead	HZS0505	31	1			
33	Washer—spring	LWZ205	32	1			
34	Screw—blanking plate and seal to bulkhead	HZS0405	33	1			
35	Washer—spring	LWZ204	34	1			
36	Screw—blanking master cylinder box fixing holes	HZS0403	35	2			
37	Washer—spring	LWZ204	36	2			

Item No.	DESCRIPTION	Commencing (C) GHN3/101 Part Number	Illus. No.	Qty. per Veh.	MODIFICATIONS New Part Number	MODIFICATIONS Change Point	REMARKS
	BRAKE MASTER CYLINDER						
1	**Cylinder and supply tank assembly**	**BHA4261**	1	1			
2	Barrel and tank	NSP		1			
3	Cap—filler	17H7407	2	1			
4	Seal—cap	17H7408	3	1			
5	Valve assembly	17H7629	4	1			
6	Spring—piston return	17H7981	5	1			
7	Retainer—spring	17H7554	6	1			
8	Cup—main	17H7122	7	1			
9	Washer—piston	17H7984	8	1			
10	Piston	17H7860	9	1			
11	Cup—secondary	17H7123	10	1			
12	Rod—push	17H7985	11	1			
13	Circlip	17H7560	12	1			
14	Boot	17H7411	13	1			
15	Screw—cylinder to box	HZS0507	14	1			
16	Screw—cylinder and stiffener to box	HZS0508	15	1			
17	Washer—spring—for screw	LWZ205	16	2			
18	Nut—screw	FNZ105	17	2			
19	Banjo—master cylinder	7H7851	18	1			
20	Bolt—banjo	11D5264	19	1			
21	Gasket—banjo connection	3H2287	20	1			
22	Gasket—banjo connection	3H550	21	1			
23	**Kit—brake master cylinder repair**	**8G8258**		1			
24	Valve assembly			1			
25	Cup—main			1			
26	Washer—piston			1			
27	Cup—secondary			1			
28	Boot			1			

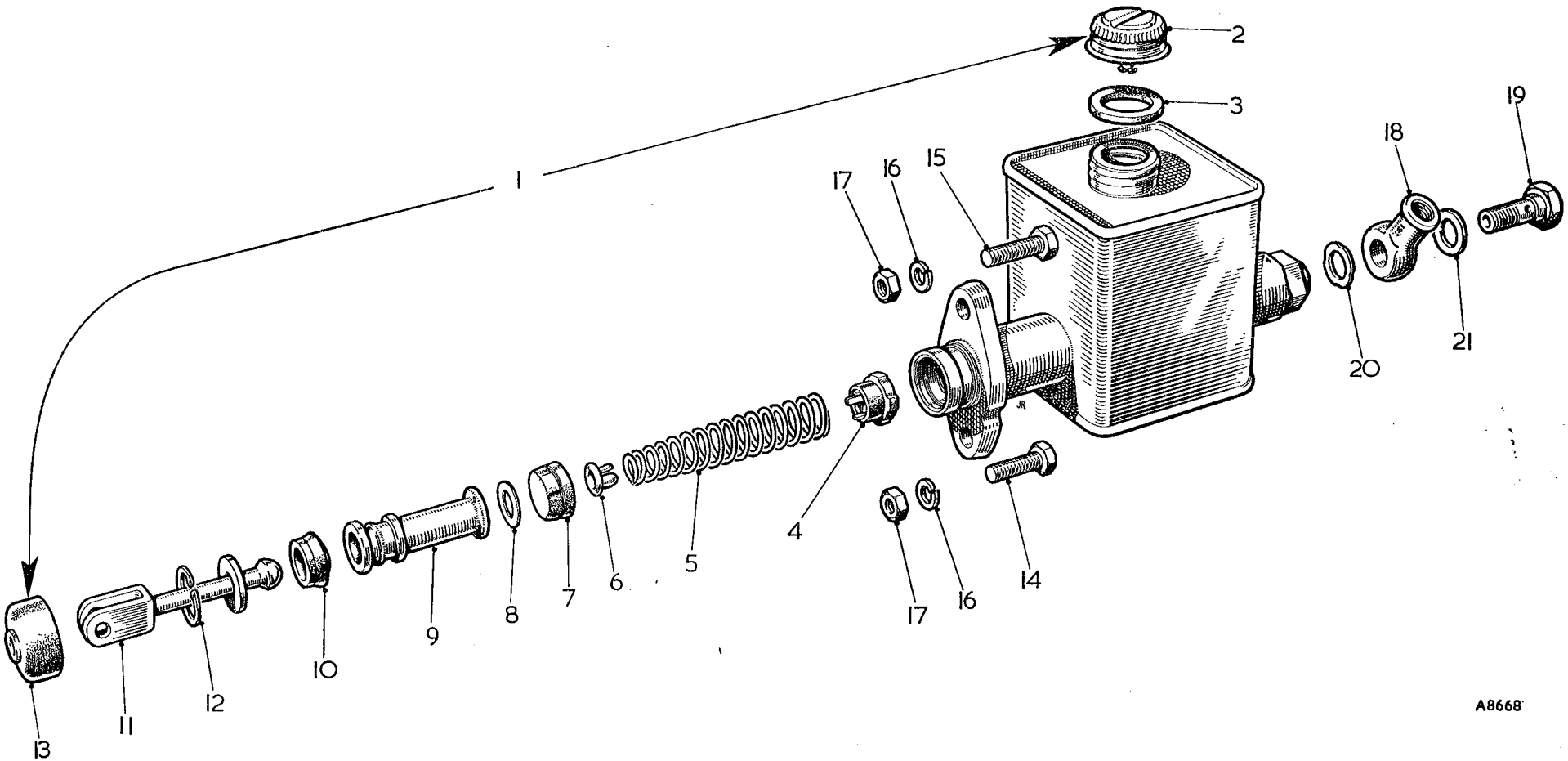

To face page M.2

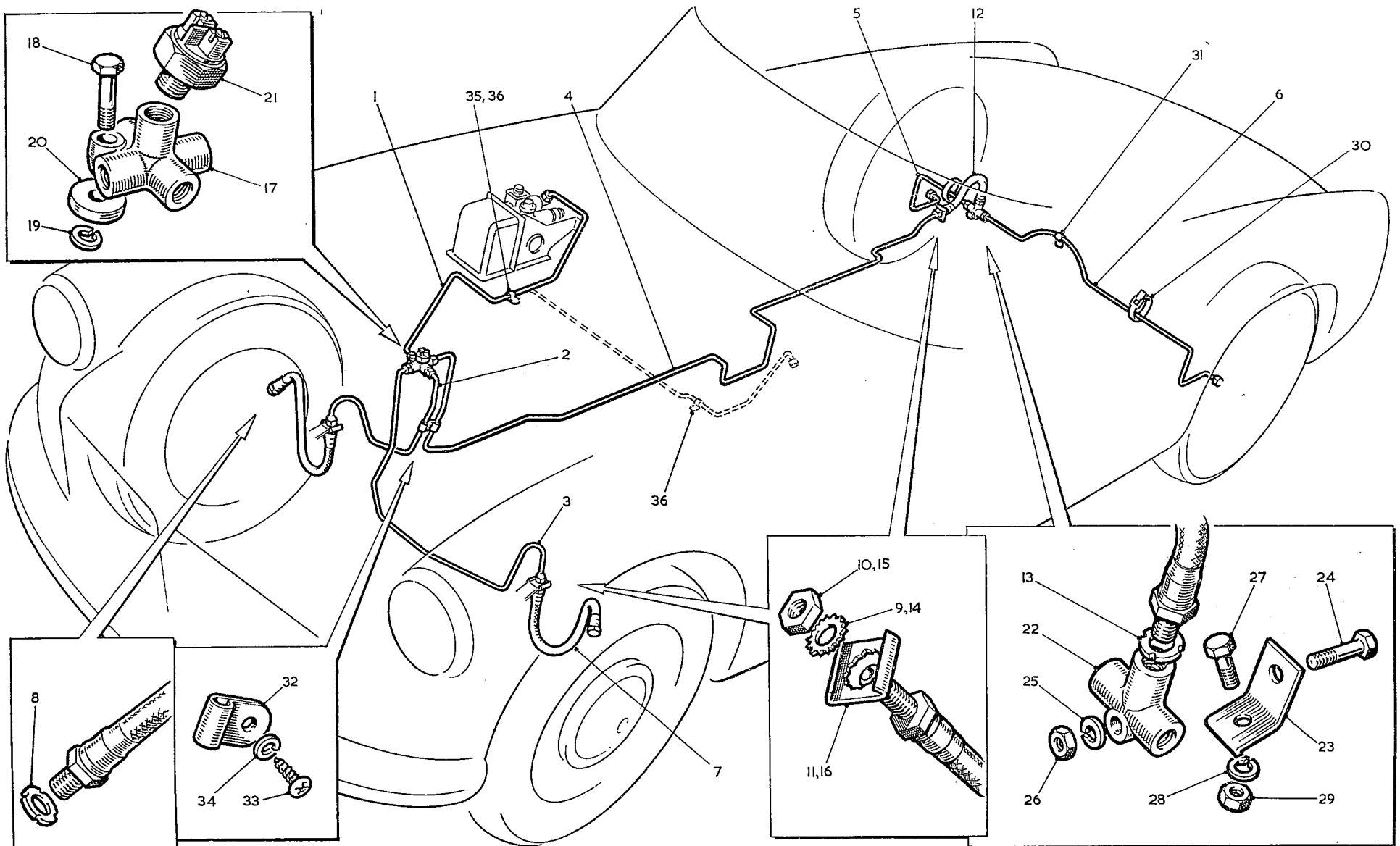

To face page M.3

Item No.	DESCRIPTION	Commencing (C) GHN3/101 Part Number	Illus. No.	Qty. per Veh.	MODIFICATIONS New Part Number	MODIFICATIONS Change Point	REMARKS
	HYDRAULIC PIPES AND FITTINGS						
1	Pipe—master cylinder to 4-way—25″ (63·5 cm.) **RHD**	AHH6364	1	1			
2	Pipe—master cylinder to 4-way—46″ (116·8 cm.) **LHD**	AHH6365	1	1			
3	Pipe—4-way to front hose RH—22″ (55·8 cm.)	AHH6367	2	1			
4	Pipe—4-way to front hose LH—51″ (129·5 cm.)	AHH6366	3	1			
5	Pipe—4-way to rear hose—93″ (236·2 cm.)	AHH6370	4	1			
6	Pipe—3-way to rear wheel cylinder—16″ (40·6 cm.)	AHH6368	5	1			
7	Pipe—3-way to rear wheel cylinder—43″ (109·2 cm.)	21A42	6	1			
8	**Hose—front brake**	**BCA4031**	**7**	**2**			
9	Gasket—front brake hose	3H2287	8	2			
10	Lock washer	17H7141	9	2			
11	Lock nut	FNZ206	10	2			
12	Plate—locking—front hose	1G9198	11	2			
13	**Hose—rear brake**	**BHA4297**	**12**	**1**			
14	Gasket—rear brake hose	3H2287	13	1			
15	lock washer	17H7141	14	1			
16	Locknut	FNZ206	15	1			
17	Plate—locking—rear hose	1G9198	16	1			
18	4-way connection	17H7108	17	1			
19	Screw—4-way to wheel arch	HZS0410	18	1			
20	Washer—spring	LWZ204	19	1			
21	Spacer—4-way	AHH6247	20	1			
22	Switch—stop lamp	2A5740	21	1			
23	3-way connection	3H2424	22	1			
24	Bracket—3-way connection	AHH6752	23	1			
25	Bolt—3-way connection to bracket	HBZ0408	24	1			
26	Washer—spring	LWZ204	25	1			
27	Nut—bolt	FNZ104	26	1			
28	Screw—bracket—3-way connection to bracket on rear axle	HZS0505	27	1			
29	Washer—spring	LWZ205	28	1			
30	Nut—screw	FNZ105	29	1			
31	Clip—brake pipe to rear axle	ACH8650	30	2			
32	Clip—LH rear brake pipe to differential case bolt	PCR0311	31	1			
33	Clip—brake pipe to front side-member	PCR0307	32	2			
34	Screw—clip to side-member	RTZ1004	33	1			
35	Washer—spring	LWZ203	34	1			
36	Clip—brake pipe to bulkhead **RHD**	PCR0311	35	1			
37	Clip—brake pipe to bulkhead **LHD**	PCR0311	36	2			

Item No.	DESCRIPTION	Commencing (C) GHN3/101 Part Number	Illus. No.	Qty. per Veh.	MODIFICATIONS New Part Number	MODIFICATIONS Change Point	REMARKS
	HAND BRAKE MECHANISM						
1	**Hand brake assembly**	**AHH6220**	1	1			
2	Handle assembly	AHH6221	2	1			
3	Grip—handle	AHH6228	3	1			
4	Knob—pawl rod	AHH6231	4	1			
5	Spring—pawl rod	AHH6230	5	1			
6	Rod—pawl	AHH6229	6	1			
7	Pawl	AHH6232	7	1			
8	Washer—plain—pawl spindle	PWZ104	8	1			
9	Plate—ratchet and stop	AHH6233	9	1			
10	Washer—hand brake spindle	AHH6234	10	2			
11	Lever—operating—hand brake	AHH6235	11	1			
12	Nut—hand brake spindle	FNZ106	12	1			
13	Washer—spring—nut	LWZ506	13	1			
14	Screw—hand brake to gearbox cover	1B8859	14	3			
15	Fulcrum—hand brake compensator	AHH5025	15	1			
16	Nut—fulcrum to axle	LNZ106	16	1			
17	Nut—compensator to fulcrum	LNZ105	17	1			
18	Washer—plain—compensator to fulcrum	PWZ205	18	1			
19	Lever—compensating—inner	AHH5203	19	1			
20	Lever—compensating—outer	ACH5101	20	1			
21	Bush—compensating lever	AHH5225	21	1			
22	Washer—anti-rattle—compensating lever	AHH5224	22	1			
23	Washer—plain—compensating lever	PWZ107	23	2			
24	Screw—compensating lever	HZS0405	24	1			
25	Washer—spring—screw	LWZ204	25	1			
26	Nut—screw	FNZ104	26	1			
27	**Cable—hand brake**	**AHH5227**	27	1			**Disc wheels only**
28	**Cable—hand brake**	**AHH5228**		1			**Wire wheels only**
29	Trunnion—cable	AHH5322	28	1			
30	Nut—adjuster	ACH5104	29	1			
31	Spring—cable	ACH8508	30	1			
32	Washer—plain—cable spring—rear	PWZ104	31	1			
33	Washer—plain—cable spring—front	PWZ204	32	1			
34	Pin—clevis	ACB8715	33	2			
35	Nut—abutment	FNZ105	34	1			
36	Washer—spring—abutment	LWZ205	35	1			
37	Clamp—cable—hand brake	AHH6236	36	1			
38	Nut—clamp	53K1420	37	1			
39	Ferrule—hand brake cable	ACH8529	38	1			

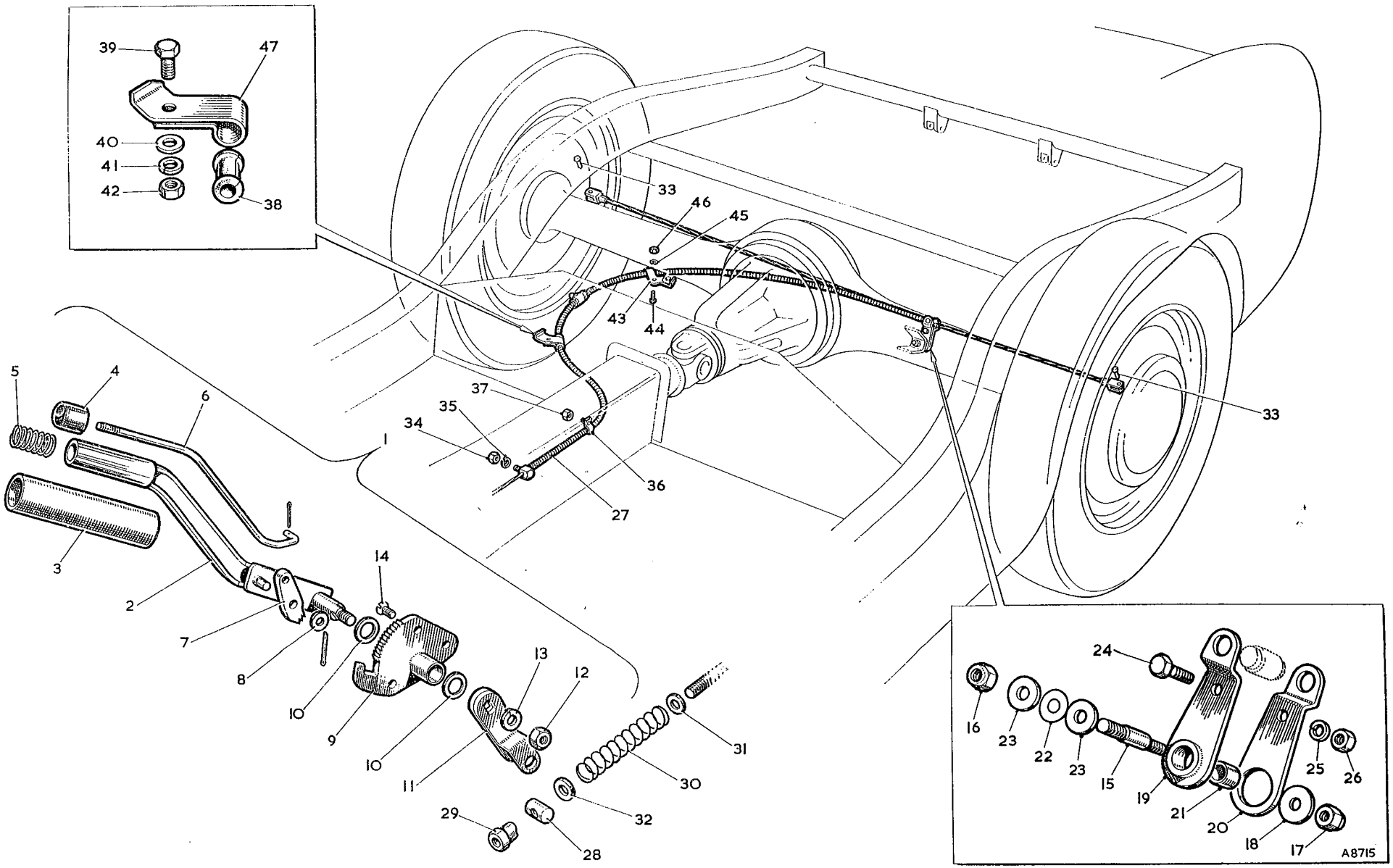

To face page M.4

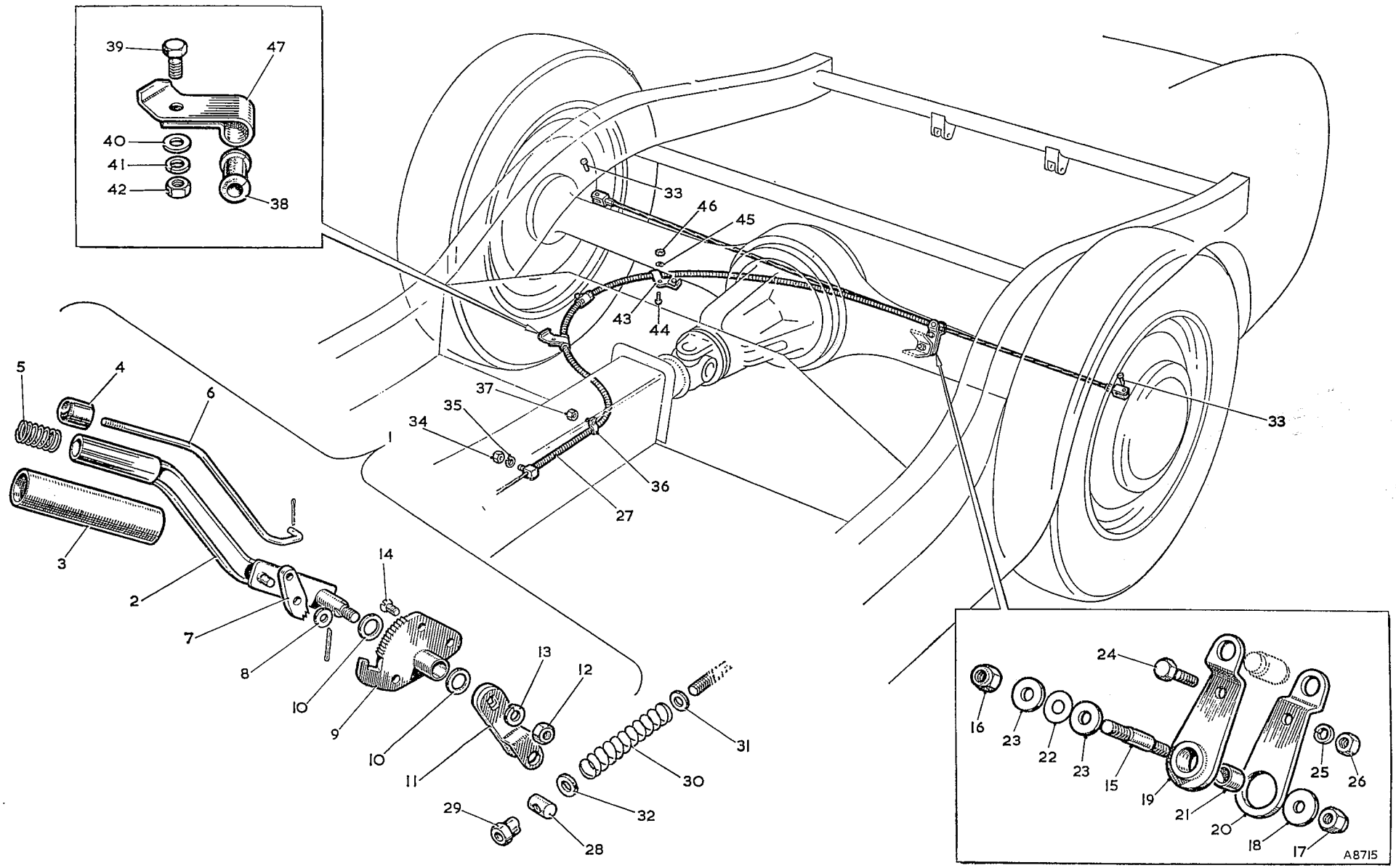

To face page M.5

Item No.	DESCRIPTION	Commencing (C) GHN3/101 Part Number	Illus. No.	Qty. per Veh.	MODIFICATIONS New Part Number	MODIFICATIONS Change Point	REMARKS
	Hand Brake Mechanism—*continued*						
1	Clip—hand brake cable	AHH6237	38	1			
2	Screw—clip	HZS0404	39	1			
3	Washer—plain—screw	PWZ104	40	1			
4	Washer—spring—screw	LWZ204	41	1			
5	Nut—screw	FNZ104	42	1			
6	Clip—cable to 3-way connection	AHH5295	43	1			
7	Screw—clip to 3-way connection	PMZ0306	44	1			
8	Washer—spring—screw	LWZ203	45	1			
9	Nut—screw	FNZ103	46	1			

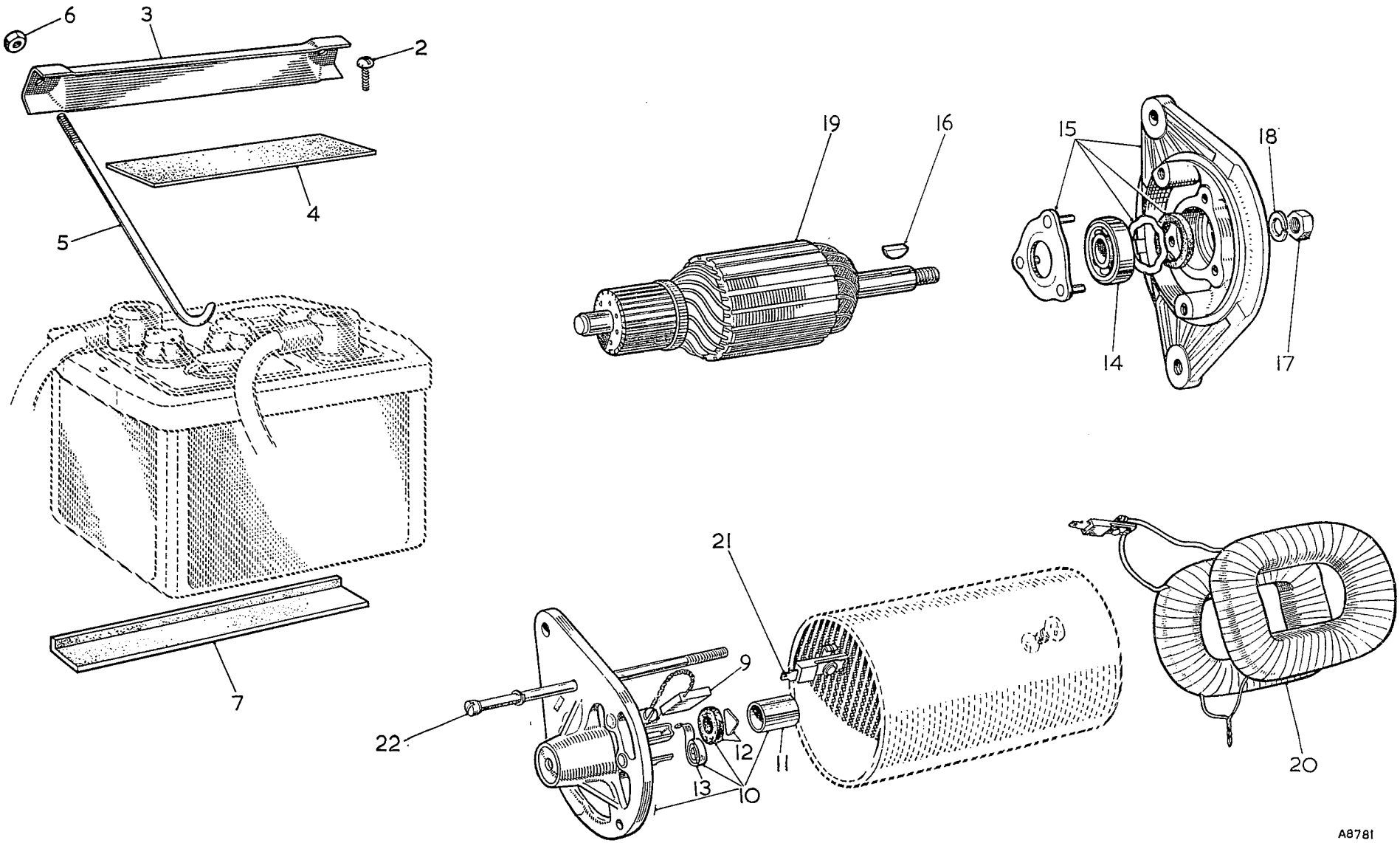

To face page N.1

Item No.	DESCRIPTION	Commencing (C) GHN3/101 Part Number	Illus. No.	Qty. per Veh.	MODIFICATIONS New Part Number	MODIFICATIONS Change Point	REMARKS
	ELECTRICAL EQUIPMENT						
	BATTERY						
1	Battery	NSP	1	2			
2	Screw—terminal	2K8645	2	4			
3	Clamp—battery	AHH6353	3	2			
4	Packing—battery clamp	AHH5169	4	2			
5	Bolt—battery	AHH6750	5	4			
6	Locknut—bolt	FNZ204	6	8			
7	Pad—battery (rubber)	AHH6351	7	4			
	DYNAMO						
8	**Dynamo**	**13H219**	8	1			] **Alternatives**
9	**Dynamo**	**13H425**		1			
10	Brush	47H5388	9	set			
11	**Bracket assembly—commutator end**	**47H5395**	10	1			
12	Bush—bracket	7H5390	11	1			
13	Oiler	47H5394	12	1			
14	Spring—brush tension	47H5389	13	set			
15	Bearing—drive end	97H626	14	1			
16	Bracket assembly—drive end	47H5393	15	1			
17	Key—pulley	WKN404	16	1			
18	Nut—shaft	FNN207	17	1			
19	Washer—spring—nut	LWZ207	18	1			
20	Armature assembly	47H5391	19	1			
21	Coils—field	47H5390	20	set			
22	Terminal assembly	57H5084	21	1			
23	Bolt—through-fixing	17H5217	22	2			
24	Sundry parts	57H5085	23	set			

Item No.	DESCRIPTION	Commencing (C) GHN3/101 Part Number	Illus. No.	Qty. per Veh.	MODIFICATIONS New Part Number	MODIFICATIONS Change Point	REMARKS
	STARTER						
1	**Starter**	**13H628**	**1**	**1**			
2	Brush	7H5002	2	1 set			
3	Band—cover	7H5000	3	1			
4	**Drive assembly**	**7H6938**	**4**	**1**			
5	Sleeve—screwed with control nut	7H6939	5	1			
6	**Pinion and barrel assembly**	**7H6940**	**6**	**1**			
7	Ring—barrel retaining	7H8319	7				
8	Cap—shaft	7H5001	8	1			
9	**Bracket—commutator end**	**7H5498**	**9**	**1**			
10	Bush—commutator end	7H5004	10	1			
11	Spring—brush tension	7H5005	11	1 set			
12	**Bracket—driving end**	**7H5010**	**12**	**1**			
13	Bush—driving end	7H5011	13	1			
14	Armature	7H6942	14	1			
15	Field coils	7H5013	15	1 set			
16	Bolt—end covers	7H5339	16	2			
17	Key—shaft	7H6941	17	1			
18	Sundry parts	7H5156	18	1 set			
19	Screw—starter to gearbox	53K149	19	2			
20	Washer—spring—screw	LWN306	20	2			

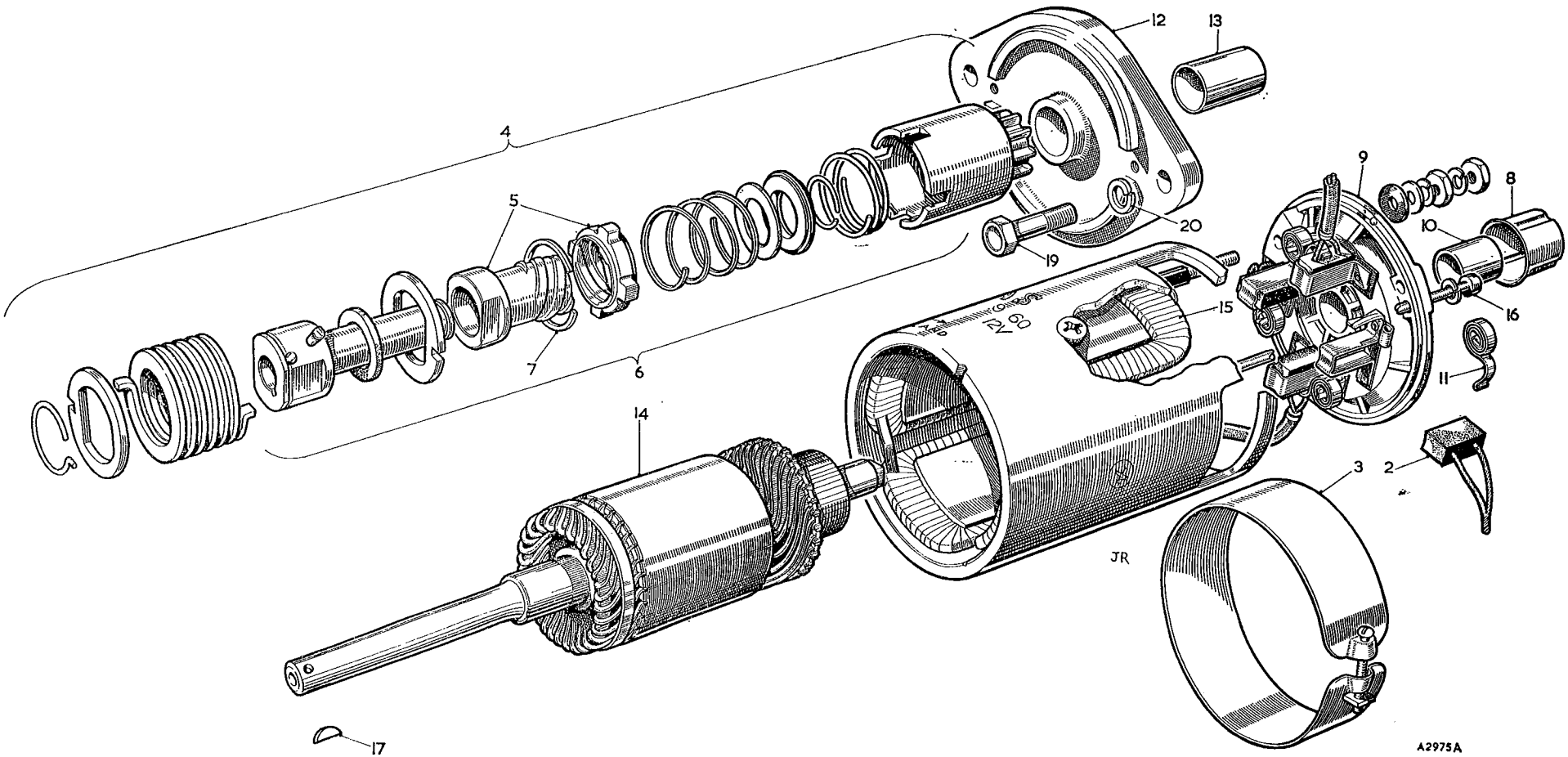

To face page N.2

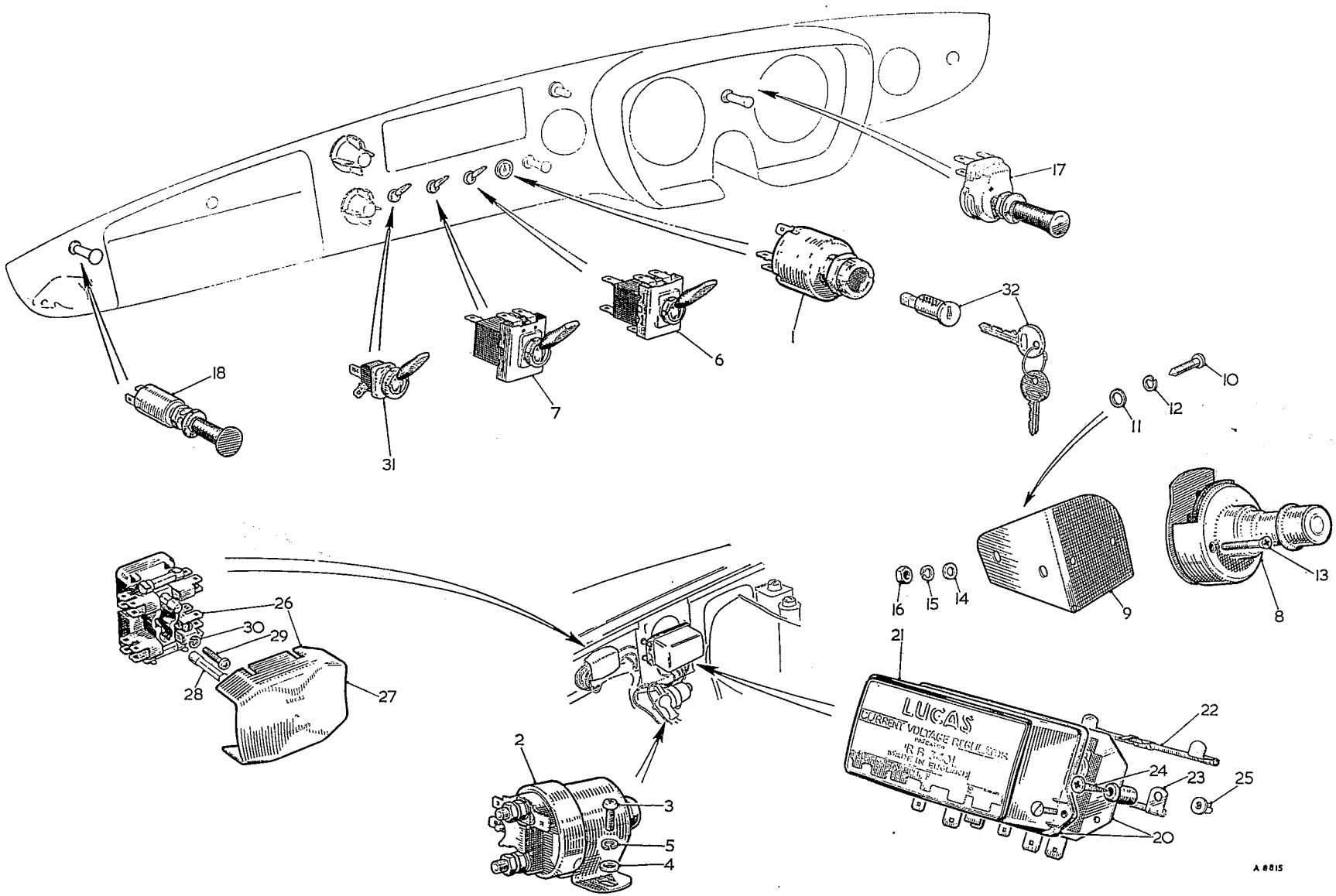

To face page N.3

Item No.	DESCRIPTION		Commencing (C) GHN3/101 Part Number	Illus. No.	Qty. per Veh.	MODIFICATIONS New Part Number	MODIFICATIONS Change Point	REMARKS
	SWITCHES							
1	**Switch—starter and ignition**		**13H337**	**1**	**1**			
2	**Switch—starter solenoid**		**BCA4501**	**2**	**1**			
3	Screw—starter solenoid switch		PMZ0306	3	2			
4	Washer—plain		PWZ103	4	2			
5	Washer—spring		LWZ203	5	2			
6	**Switch—light**		**BCA4294**	**6**	**1**			
7	**Switch—windscreen wiper**		**BHA4237**	**7**	**1**			
8	**Switch—headlamp dipper**		**13H176**	**8**	**1**			
9	Bracket—dipper switch	RHD	AHH6272	9	1			
10	Screw—bracket to centre panel pedal box	RHD	PPZ0410	10	2			
11	Washer—plain	RHD	PWZ104	11	2			
12	Washer—spring	RHD	LWZ204	12	2			
13	Screw—dipper switch to bracket	RHD	CMZ0318	13	2			
14	Washer—plain	RHD	PWZ103	14	2			
15	Washer—spring	RHD	LWZ203	15	2			
16	Nut—screw	RHD	FNZ103	16	2			
17	Screw—dipper switch to LH pedal box	LHD	CMZ0318		2			
18	**Switch—panel light**		**BHA4278**	**17**	**1**			
19	**Switch—map light**		**BHA4280**	**18**	**1**			
20	**Switch—headlamp flasher**		**BHA4116**	**19**	**1**			**Optional extra**
21	**Box—control**		**BMK735**	**20**	**1**			
22	Cover		57H5398	21	1			
23	Resistance—swamp—55 ohms		57H5396	22	1			
24	Resistance—points—60 ohms		57H5395	23	1			
25	Screw—control box to support bracket		PTZ810	24	3			
26	Nut—screw		13H226	25	3			
27	**Fusebox**		**13H252**	**26**	**1**			
28	Cover		47H5212	27	1			
29	Fuse—35-amp.		7H5067	28	4			
30	Screw—fusebox to RH wheel arch		PMZ0310	29	1			
31	Nut—screw		LWZ203	30	1			
32	**Switch—heater**		**BCA4312**	**31**	**1**			
33	**Lock—ignition**		**2H4185**	**44**	**1**			
34	Key		ANK4646		2			

Item No.	DESCRIPTION	Commencing (C) GHN3/101 Part Number	Illus. No.	Qty. per Veh.	MODIFICATIONS New Part Number	MODIFICATIONS Change Point	REMARKS
	LAMPS (ROAD)						
1	**Headlamp ..... U.K., RHD**	**NSP**		2			
2	**Body assembly**	**7H8335**	1	2			
3	Plate—light unit retaining	57H5292	2	2			
4	Screw—retaining plate	37H5192	3	6			
5	**Adaptor and cable**	**BHA4235**	4	2			
6	**Adaptor**	**47H5126**	5	2			
7	Sleeve—terminal	37H5271	6	6			] Alternatives
8	Sleeve—terminal	7H5582		6			
9	Spring—rim—unit seating	67H5026	7	2			
10	Screw—beam—adjustment	67H5025	8	4			
11	Rim	57H5296	9	2			
12	Light unit—sealed beam	13H496	10	2			
13	Gasket—body	13H565	11	2			
14	**Headlamp ..... Except Europe and N. America, LHD**	**NSP**		2			
15	**Body assembly**	**17H2088**	12	2			
16	**Bulb holder and cable**	**17H5145**	13	2			
17	**Bulb holder**	**17H5306**		2			
18	Sleeve—terminal	37H5271	6	2			] Alternatives
19	Sleeve—terminal	7H5582		2			
20	Screw—beam adjustment	17H5894	14	6			
21	Spring—screw	17H5231	15	6			
22	Sleeve—sealing	27H5253	16	6			
23	Rim	57H5296	9	2			
24	**Plate—light unit retaining**	**17H5205**	17	2			
25	Screw—unit rim	37H5192	3	6			
26	Light unit	17H5375	18	2			
27	Bulb—right dip	BFS355	19	2			
28	Gasket—body	7H8338	20	2			
29	**Headlamp ..... N. AMERICA, LHD**	**NSP**		2			
30	**Body assembly**	**7H8335**	1	2			
31	Plate—light unit retaining	57H5292	2	2			
32	Screw—retaining plate	37H5192	3	6			
33	**Adaptor and cable**	**BHA4235**	4	2			
34	**Adaptor**	**47H5126**	5	2			
35	Sleeve—terminal	37H5271	6	6			] Alternatives
36	Sleeve—terminal	7H5582		6			
37	Spring—rim—unit seating	67H5026	7	2			
38	Screw—beam—adjustment	67H5025	8	4			
39	Rim	57H5296	9	2			
40	Gasket—body	13H565	11	2			
41	Screw—headlamp to wing	PMZ0810		8			
42	Washer—spring	LWZ203		8			
43	Nut—screw	FNZ103		8			

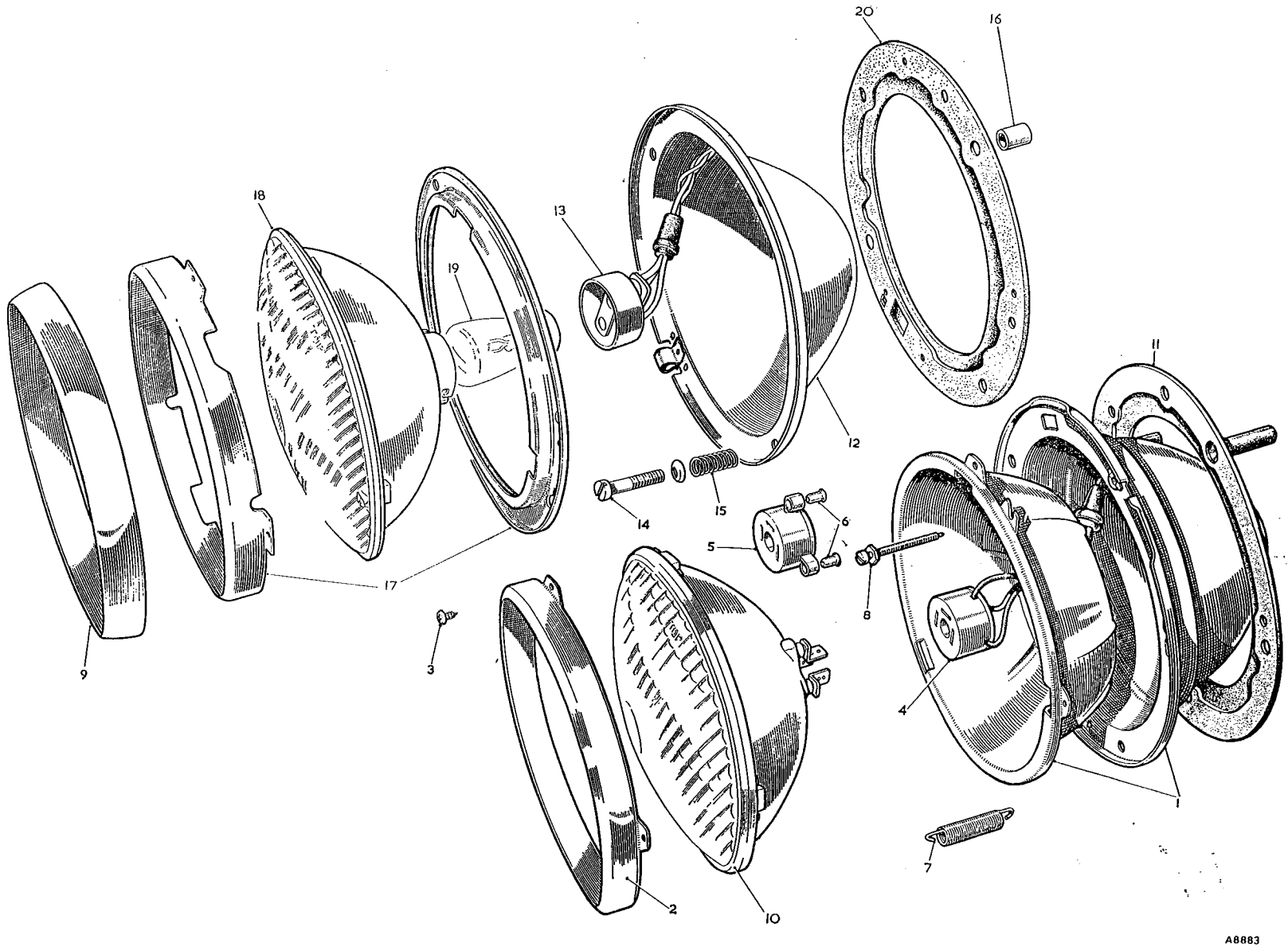

To face page N.4

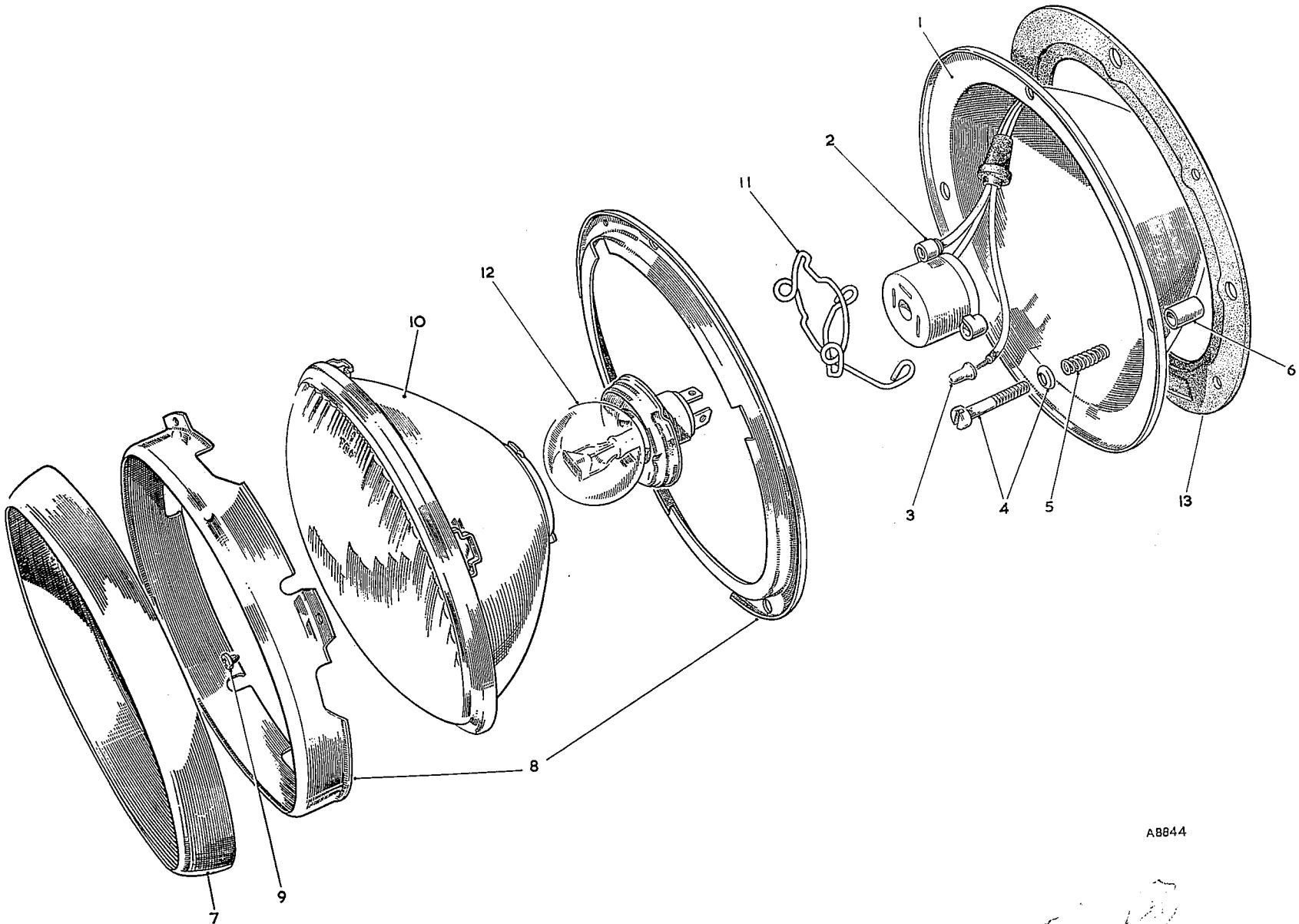

To face page N.5

Item No.	DESCRIPTION	Commencing (C) GHN3/101 Part Number	Illus. No.	Qty. per Veh.	MODIFICATIONS New Part Number	MODIFICATIONS Change Point	REMARKS
	Lamps (Road)—*continued*						
1	**Headlamp** ..... **FRANCE, LHD**	**NSP**		2			
2	**Body assembly**	**67H5035**	1	2			
3	**Adaptor and cable**	**BHA4235**	2	2			
4	**Adaptor**	**47H5126**		2			
5	Sleeve—terminal	37H5271	3	6			] Alternatives
6	Sleeve—terminal	7H5582		6			
7	Screw—beam adjustment	17H5394	4	6			
8	Spring—screw	17H5231	5	6			
9	Sleeve—sealing	27H5253	6	6			
10	Rim	57H5296	7	2			
11	Plate—light unit retaining	17H5205	8	2			
12	Screw—unit rim	37H5192	9	6			
13	Light unit	47H5124	10	2			
14	Spring—bulb retaining	47H5125	11	2			
15	Bulb—vertical (yellow)	BFS411	12	2			
16	Gasket—body	7H8338	13	2			
17	**Headlamp** ..... **SWEDEN**	**NSP**		2			
18	**Body assembly**	**67H5035**	1	2			
19	**Adaptor and cable**	**BHA4235**	2	2			
20	**Adaptor**	**47H5126**		2			
21	Sleeve—terminal	37H5271	3	6			] Alternatives
22	Sleeve—terminal	7H5582		6			
23	Screw—beam adjustment	17H5394	4	6			
24	Spring—screw	17H5231	5	6			
25	Sleeve—sealing	27H5253	6	6			
26	Rim	57H5296	7	2			
27	Plate—light unit retaining	17H5205	8	2			
28	Screw—unit rim	37H5192	9	6			
29	Light unit	47H5528		2			
30	Spring—bulb retaining	47H5125	11	2			
31	Bulb—vertical dip	BFS410		2			
32	Gasket—body	7H8338	13	2			
33	**Headlamp** ..... **Europe except France and Sweden, LHD**	**NSP**		2			
34	**Body assembly**	**67H5035**	1	2			
35	**Adaptor and cable**	**BHA4235**	2	2			
36	**Adaptor**	**47H5126**		2			
37	Sleeve—terminal	37H5271	3	6			] Alternatives
38	Sleeve—terminal	7H5582		6			
39	Screw—beam adjustment	17H5394	4	6			
40	Spring—screw	17H5231	5	6			
41	Sleeve—sealing	27H5253	6	6			
42	Rim	57H5296	7	2			
43	Plate—light unit retaining	17H5205	8	2			
44	Screw—unit rim	37H5192	9	6			
45	Light unit	47H5124	10	2			
46	Spring—bulb retaining	47H5125	11	2			
47	Bulb—vertical dip	BFS410		2			
48	Gasket—body	7H8338	13	2			

Item No.	DESCRIPTION	Commencing (C) GHN3/101 Part Number	Illus. No.	Qty. per Veh.	MODIFICATIONS New Part Number	MODIFICATIONS Change Point	REMARKS
	Lamps (Road)—*continued*						
1	**Lamp—side and flasher—amber**	**BHA4238**		2			
2	**Lamp—side and flasher—white** **LHD**	**BHA4239**		2			
3	Rim	57H5568		2			
4	Screw—fixing rim	57H5569		4			
5	Lens—flasher lamp—amber	17H3319		2			
6	Lens—flasher lamp—white **LHD**	17H3308		2			
7	Lens—sidelamp	57H5571		2			
8	Baffle—amber flasher lens	17H3310		2			
9	Gasket—lens seating	57H5572		2			Only required with amber flasher
10	Interior—bulb holder—flasher lamp	37H5452		2			
11	Bulb—flasher lamp	BFS382		2			
12	Interior—bulb holder—sidelamp	7H5536		2			
13	Bulb—sidelamp	BFS989		2			
14	Grommet—flasher lamp cable	57H5465		2			
15	Grommet—sidelamp cable	37H5294		2			
16	Gasket—lamp seating	57H5572		2			
17	Dotloc—earthing type—lamp to body	2A9156		4			

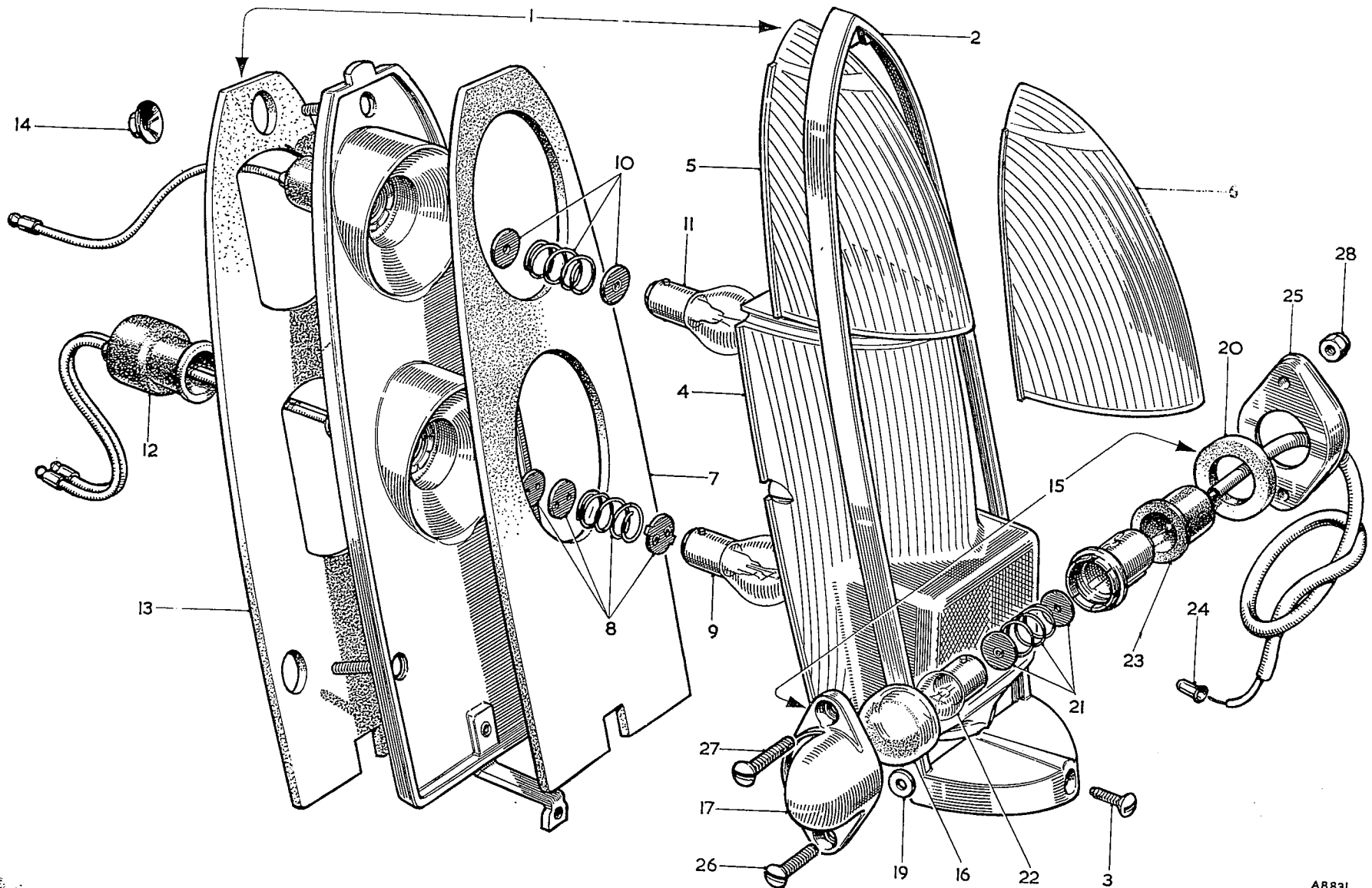

To face page N.7

Item No.	DESCRIPTION	Commencing (C) GHN3/101 Part Number	Illus. No.	Qty. per Veh.	MODIFICATIONS New Part Number	MODIFICATIONS Change Point	REMARKS
	Lamps (Road)—*continued*						
1	**Lamp—stop/tail/flasher and reflex—amber**	**BHA4175**	1	2			
2	**Lamp—stop/tail/flasher and reflex—red** **LHD**	**BHA4176**		2			
3	Rim	57H5355	2	2			
4	Screw—fixing rim	17H5425	3	2			
5	Lens—stop/tail	57H5357	4	2			
6	Lens—flasher—amber	57H5354	5	2			
7	Lens—flasher—red **LHD**	~~57H5355~~	6	2			
8	Gasket—lens seating	57H5356	7	2			
9	Interior—bulb holder—stop/tail	37H5459	8	2			
10	Bulb—stop/tail	BFS380	9	2			
11	Interior—bulb holder flasher	37H5452	10	2			
12	Bulb—flasher	BFS382	11	2			
13	Grommet—cable	37H5525	12	4			
14	Gasket—lamp seating	57H5358	13	2			
15	Dotloc—earthing type—lamp to body	BHA4242	14	6			
16	**Lamp—number-plate**	**BHA4283**	15	2			
17	Glass	17H5301	16	2			
18	**Cover**	**37H5426**	17	2			
19	Screw—fixing cover	57H5579	18	4			
20	Washer—retaining screw	21G9057	19	4			
21	Gasket—lens seating	17H5302	20	2			
22	Interior—bulb holder	37H5452	21	2			
23	Bulb	BFS207	22	2			
24	Grommet—cable	17H5216	23	2			
25	Sleeve—terminal	7H5582	24	2			
26	Plinth—number-plate lamp—RH	AHH6398	25	1			
27	Plinth—number-plate lamp—LH	AHH6399		1			
28	Screw—number-plate lamp and plinth to over-riders	RMP0314	26	2			
29	Screw—number-plate lamp and plinth to over-riders	RMP0316	27	2			
30	Nut—screw		28	4			

Item No.	DESCRIPTION	Commencing (C) GHN3/101 Part Number	Illus. No.	Qty. per Veh.	MODIFICATIONS New Part Number	MODIFICATIONS Change Point	REMARKS
	FLASHER, HORN AND CONTROLS						
1	**Switch—direction indicator**	**AHH6318**	1	1			
2	Contact assembly	67H5021	2	1			
3	Cowling—direction indicator switch—top **RHD**	AHH6314	3	1			
4	Cowling—direction indicator switch—bottom **RHD**	AHH6316	4	1			
5	Cowling—direction indicator switch—top **LHD**	AHH6315		1			
6	Cowling—direction indicator switch—bottom **LHD**	AHH6317		1			
7	Screw—cowling	RMP0214	5	4			
8	Stud—indicator switch trip	21G6050	6	1			
9	Nut—stud	FNZ103	7	1			
10	Unit—flasher	13H110	8	1			
11	Bracket—bulb holder—flasher warning light	AHH6275	9	1			
12	Shield—flasher warning light	AHH6332	10	2			
13	Window—flasher warning light (plastic)	AHH6334	11	2			
14	Tube—lamp	AHH6333	12	2			
15	**Horn—high note**	**13H472**	13	1			
16	Bracket	57H5309	14	1			
17	Sundry parts	57H5310	15	1 set			
18	Screw—horn to bonnet lock platform—RH side	PMZ0408	16	2			
19	Washer—spring—screw	LWZ204	17	2			
20	Washer—plain—screw	PWZ104	18	2			
21	Nut—screw	FNZ104	19	2			
22	**Horn—low note**	**13H473**		1			
23	Bracket	57H5309		1			Optional extra
24	Sundry parts	57H5310		1 set			
25	Screw—horn to bonnet lock platform—LH side	PMZ0408		2			
26	Washer—spring—screw	LWZ204		2			
27	Washer—plain—screw	PWZ104		2			
28	Nut—screw	FNZ104		2			
29	**Horn-push assembly**	**AHH6319**	20	1			
30	Contact—bezel and upper	37H5579	21	1			
31	Spring—horn push	57H5595	22	3			
32	Plate—retaining and lower contact	47H5408	23	1			
33	Nut—plate	47H5469	24	3			
34	Sundry parts	37H5581	25	1			
35	Cover and motif	57H5594	26	1			
36	Screw—horn push	53K2613	27	3			
37	**Slip-ring and horn contact assembly**	**ACA9685**	28	1			
38	**Rotor (top and bottom) complete with cable**	**7H6903**	29	1			
39	Contact	7H6904	30	1			
40	Spring	7H6902	31	1			
41	Slip-ring	27H5401	32	1			

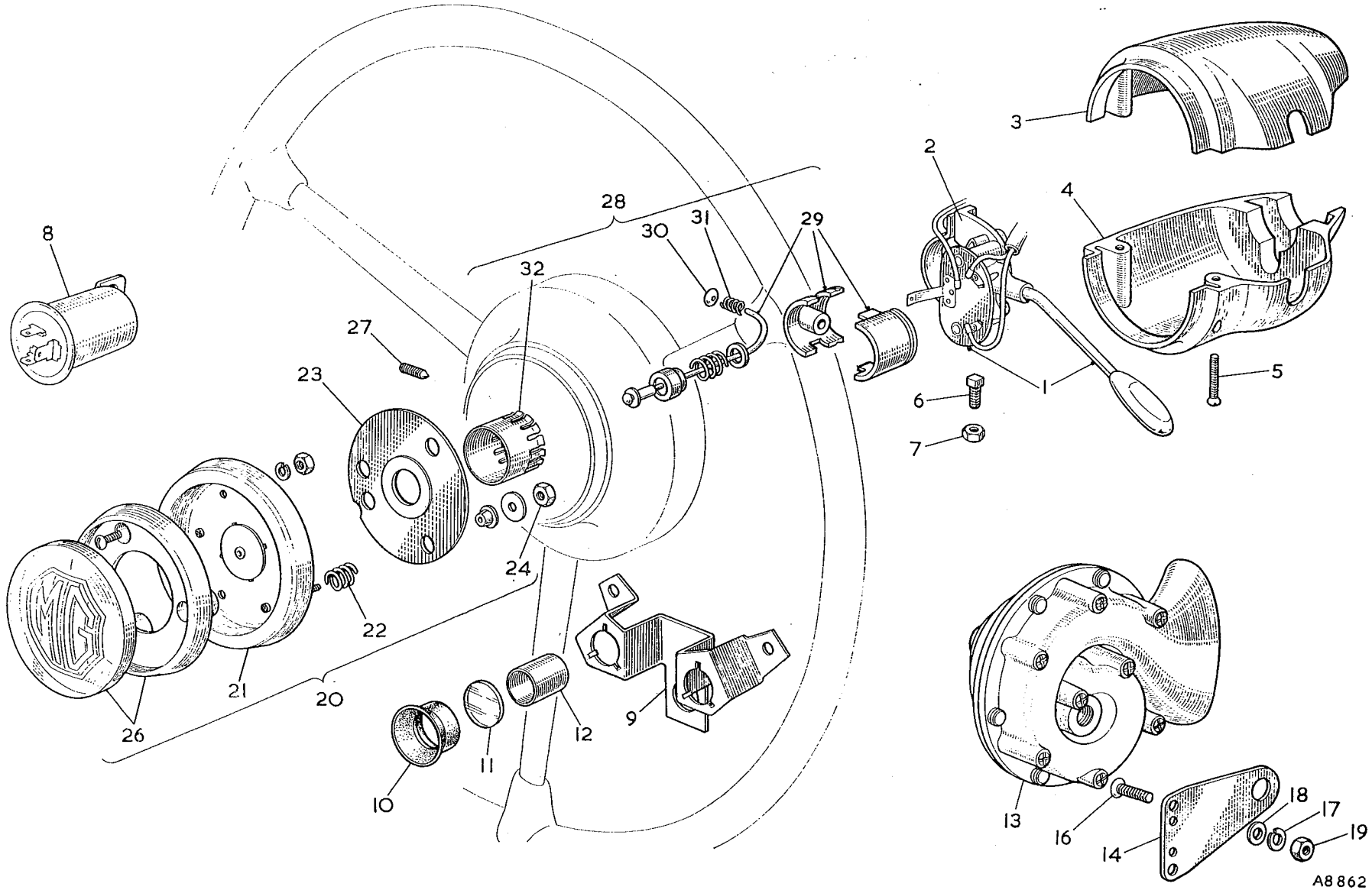

To face page N.8

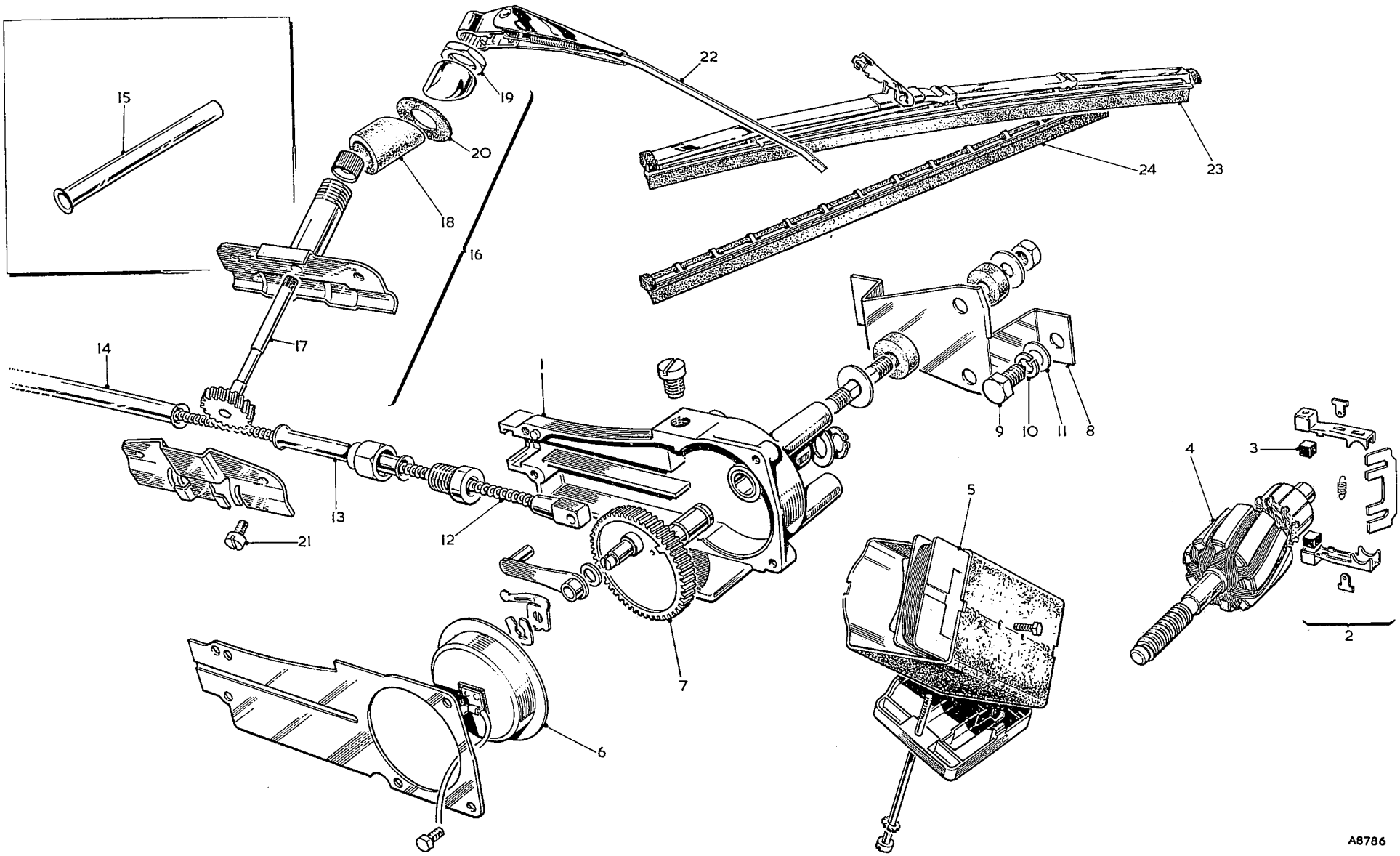

To face page N.9

Item No.	DESCRIPTION	Commencing (C) GHN3/101 Part Number	Illus. No.	Qty. per Veh.	MODIFICATIONS New Part Number	MODIFICATIONS Change Point	REMARKS
	WINDSCREEN WIPERS						
1	**Motor—windscreen wiper**	**17H2013**	**1**	**1**			
2	**Brush gear**	**17H5396**	**2**	**1**			
3	Brush	7H5130	3	1 set			
4	Armature	27H5374	4	1			
5	Coil—field	57H5558	5	1			
6	Fixing parts	17H5431		1 set			
7	Switch—parking	57H5559	6	1			
8	Shaft and gear	57H5312	7	1			
9	Sundry parts	17H5441		1 set			
10	Bracket—wiper motor	HZA126	8	1			
11	Screw—bracket to bulkhead	HZS0405	9	3			
12	Washer—spring	LWZ204	10	3			
13	Washer—plain	PWZ204	11	3			
14	Cross-head and rack	37H5169	12	1			
15	Casing—motor to wheelbox	BHA4322	13	1			
16	Casing—wheelbox to wheelbox	BHA4323	14	1			
17	Casing—wheelbox to extension	14G3722	15	1			
18	**Wheelbox**	**BHA4324**	**16**	**2**			
19	Spindle and gear	AJH5079	17	2			
20	Tube—spindle (rubber)	ANK3458	18	2			
21	Nut—wheelbox	185925	19	2			
22	Washer (rubber)	ADC560	20	2			
23	Screw—cover	17H5390	21	4			
24	Arm—wiper **RHD**	BHA4320	22	2			
25	Arm—wiper **LHD**	BHA4321		2			
26	**Blade—wiper**	**13H469**	**23**	**2**			
27	Rubber	57H5311	24	2			

CABLES AND CONNECTIONS

Item No.	DESCRIPTION	Commencing (C) GHN3/101 Part Number	Illus. No.	Qty. per Veh.	MODIFICATIONS New Part Number	MODIFICATIONS Change Point	REMARKS
1	**Harness—main**	**BHA4344**	1	1			
2	Holder—bulb—main beam	37H5181	2	1			
3	Holder—bulb—flasher warning light	47H5166	3	2			
4	Holder—bulb—ignition warning light	47H5166		1			
5	Holder—bulb—map light	37H5181	4	1			
6	Bulb	BFS987	5	5			
7	Connector—snap—single	2H3406	6	A/R			
8	Connector—snap—2-way	2H2617	7	A/R			
9	Connector—snap—3-way	2H4992	8	A/R			
10	Plug—snap connector	2H2704	9	A/R			
11	Connector—Lucar—female (35-amp.)	47H5419	10	A/R			
12	Insulator—connector	47H5418	11	A/R			
13	Connector—Lucar—female (14-amp.)	47H5496	12	A/R			
14	Insulator—connector	47H5417	13	A/R			
15	Clip—main harness	PCR0607	14	1			
16	Clip—starter cable and harness	AHH6690	15	1			
17	Screw—clips to RH front wheel arch	PMZ0308		1			
18	Washer—plain	PWZ103		1			
19	Washer—spring	LWZ203		1			
20	Clip—main harness—RH side	PCR1007		2			
21	Clip—main harness—LH side	PCR0607		2			
22	Screw—clips to bonnet	PMZ0306		4			
23	Washer—spring	LWZ203		4			
24	Washer—plain	PWZ103		4			
25	Nut—screw	FNZ103		4			
26	Clip—main harness to bulkhead	PCR1009		2			
27	Clip—dip switch lead to bulkhead	PCR0509		1			
28	Clip—dip switch lead to bulkhead	PCR0507		1			
29	Washer—spring	LWZ203		1			
30	Nut	FNZ103		1			
31	Grommet—headlamp and sidelamp lead through wheel arch	RFN306		2			
32	Clip—tank unit lead to edge of tank	BHA4130	16	3			
33	**Harness—body and boot**	**BHA4345**	17	1			
34	Connector—Lucar—female (14-amp.)	47H5496	18	4			
35	Insulator—connector	47H5417	19	4			
36	Connector—snap—single	2H3406	20	5			
37	Connector—snap—2-way	2H2617	21	3			
38	Plug—snap connector	2H2704	22	17			
39	Sleeve (P.V.C.) fitted over cable clips in boot	5L64	23	5			
40	Grommet—cable through boot floor and rear lower panel	RFN303	24	3			
41	Grommet—tank lead through RH outer panel	RFN503	25	1			
42	Clip—tail lamp harness	PCR0407		2			

LHD (items 27–30)

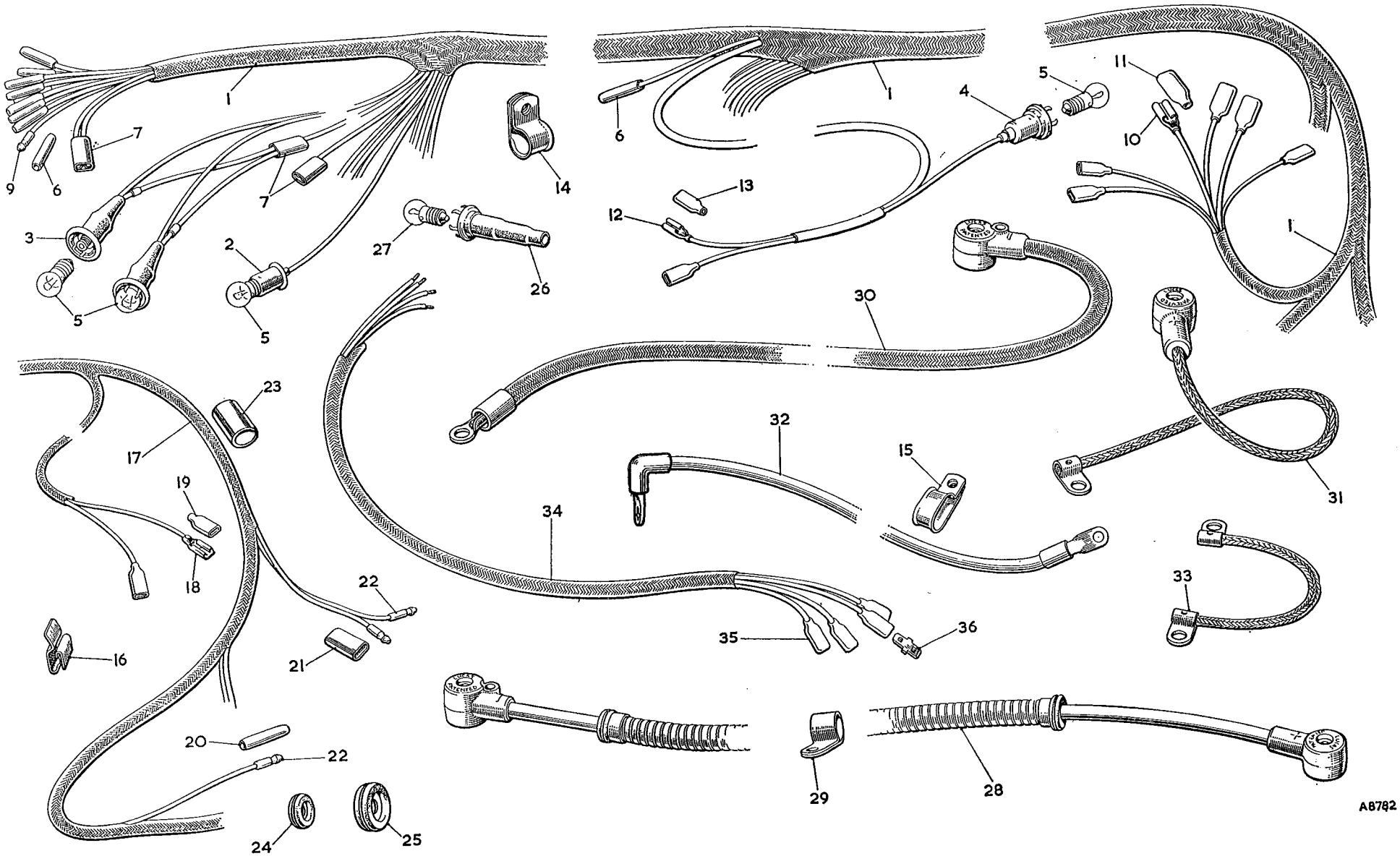

To face page N.10

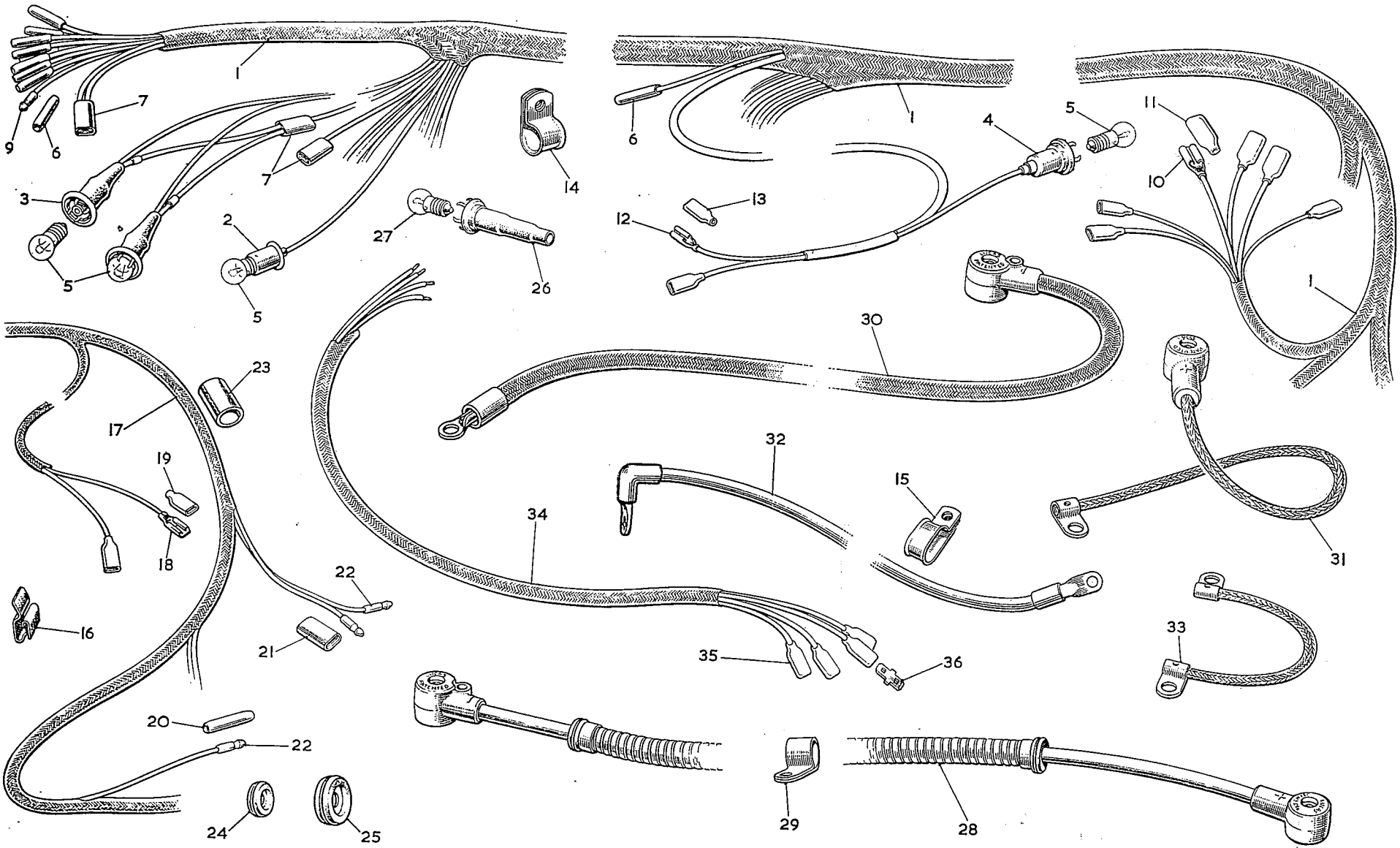

To face page N.11

Item No.	DESCRIPTION	Commencing (C) GHN3/101 Part Number	Illus. No.	Qty. per Veh.	MODIFICATIONS New Part Number	MODIFICATIONS Change Point	REMARKS
	Cables and Connections—*continued*						
1	Holder—bulb—instrument illumination	37H5181	26	4			
2	Bulb—instrument illumination	BFS987	27	4			
3	**Harness—dip switch**	**BHA4349**		1			
4	Connector—Lucar—female (14-amp.)	47H5496		3			
5	Insulator—connector	47H5417		3			
6	Plug—snap connector	2H2704		3			
7	Link—battery positive to negative	BHA4348	28	1			
8	Clip—battery link cable	AHH6354	29	1			
9	Screw—clip to heelboard stiffener	HZS0404		1			
10	Washer—spring	LWZ204		1			
11	Sleeve—clip (P.V.C.)	5L64		1			
12	Cable—battery negative to solenoid	AHH5449	30	1			
13	Cable—battery positive to earth	AHH5448	31	1			
14	Cable—solenoid to starter	AHA6280	32	1			
15	Strip—engine to earth	AHH5452	33	1			
16	**Harness—horn extension**	**BHA4347**		1			
17	Connector—Lucar—female (14-amp.)	47H5496		4			
18	Insulator—connector	47H5417		4			
19	**Harness—steering column switch**	**BHA4356**	34	1			
20	Connector—Lucar—female (14-amp.)	47H5496	35	4			] When steering lock is fitted
21	Blade—Lucar (14-amp.)	17H2132	36	4			

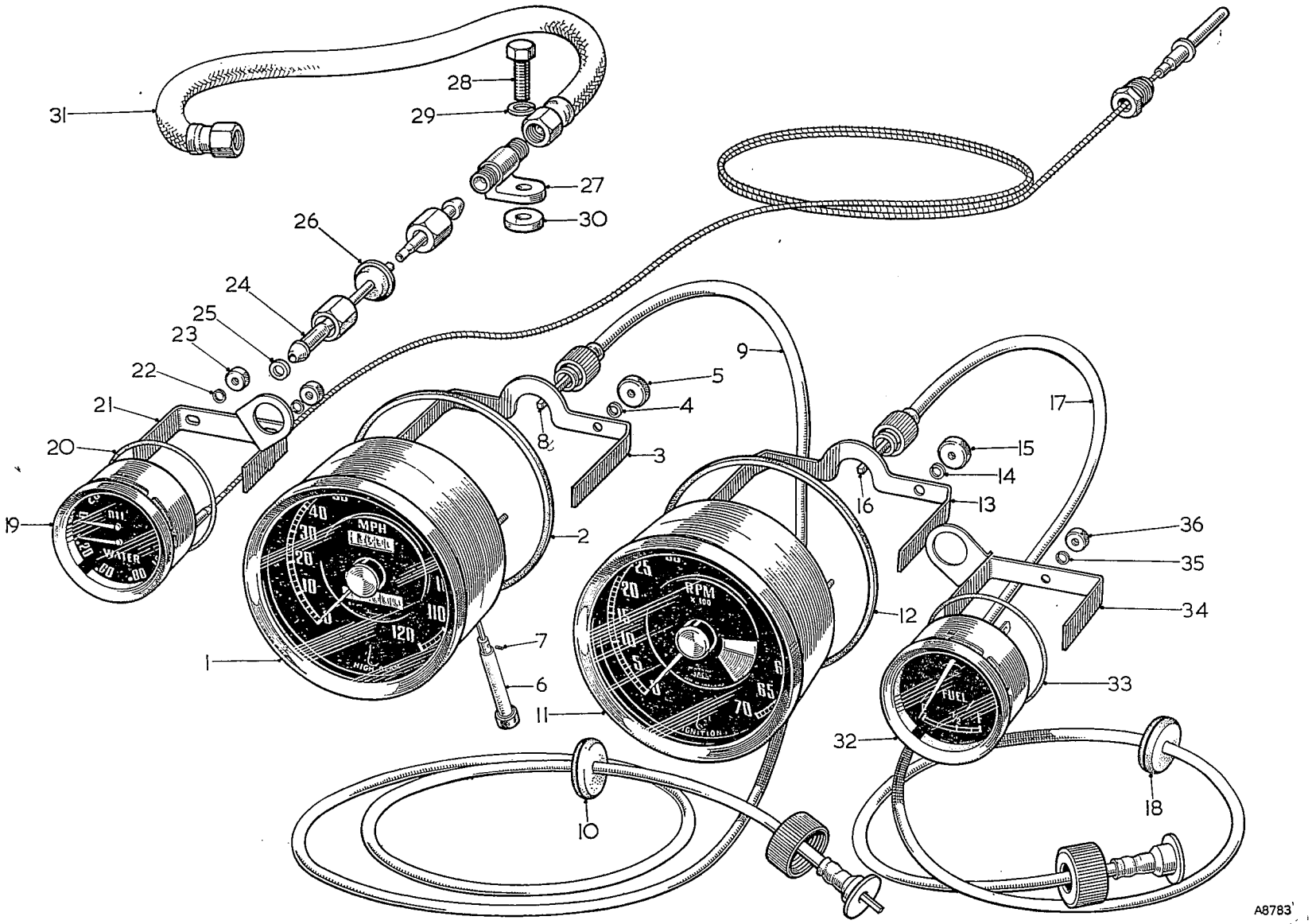

To face page 0.1

INSTRUMENTS

Item No.	DESCRIPTION		Commencing (C) GHN3/101 Part Number	Illus. No.	Qty. per Veh.	MODIFICATIONS New Part Number	MODIFICATIONS Change Point	REMARKS
1	**Speedometer (miles) 11/43 axle ratio**		**BHA4286**	1	1			**Standard**
2	**Speedometer (kilometres) 11/43 axle ratio**		**BHA4287**		1			**Standard**
3	Ring (rubber)		AJH5178	2	1			
4	Strap—fixing		AJH5176	3	1			
5	Washer—shakeproof		2K1369	4	2			
6	Nut—thumb		17H1304	5	2			
7	Trip stem assembly		37H640	6	1			
8	Screw—trip stem assembly		17H1658	7	1			
9	**Cable assembly—speedometer (3′ 9″ [114·3 cm.])**		**ACC8856**		1			**Standard**
10	Cable—inner		17H961	8	1			
11	Cable—outer		17H962	9	1			
12	Grommet—speedometer cable		ACB8474	10	1			
13	**Revolution counter**		**BHA4212**	11	1			
14	Ring (rubber)		AJH5178	12	1			
15	Strap—fixing		AJH5176	13	1			
16	Washer—shakeproof		2K1369	14	2			
17	Nut—thumb		17H1304	15	2			
18	**Cable assembly—revolution counter (3′ 6″ [106·68 cm.])**	**RHD**	**BHA4291**		1			
19	Cable—inner	**RHD**	37H1204	16	1			
20	Cable—outer	**RHD**	37H1205	17	1			
21	**Cable assembly—revolution counter (2′ 3″ [68·58 cm.])**	**LHD**	**BHA4314**		1			
22	Cable—inner	**LHD**	7H8353		1			
23	Cable—outer	**LHD**	7H8352		1			
24	Grommet—revolution counter cable	**LHD**	ACB8474	18	1			

Item No.	DESCRIPTION	Commencing (C) GHN3/101 Part Number	Illus. No.	Qty. per Veh.	MODIFICATIONS New Part Number	MODIFICATIONS Change Point	REMARKS
	Instruments—*continued*						
1	**Gauge—oil pressure and temperature (Fahrenheit)**	**BHA4295**	19	1			
2	**Gauge—oil pressure and temperature (Centigrade)**	**BHA4296**		1			
3	Ring (rubber)	27H972	20	1			
4	Strap—fixing	AJH5186	21	1			
5	Washer—spring	27H387	22	2			
6	Nut—thumb	17H932	23	2			
7	**Pipe assembly—oil gauge**	**AHH6678**	24	1			
8	Nipple	ACA5422		1			
9	Nut	ACA5421		1			
10	Union	51K2824		1			
11	Nut	11B2037		1			
12	Washer—oil pipe to oil gauge (leather)	2K4936	25	1			
13	Ferrule—oil gauge pipe	84138	26	1			
14	Connector—oil gauge pipe	83875	27	1			
15	Screw—connector to bulkhead	HZS0408	28	1			
16	Washer—spring—screw	LWZ204	29	1			
17	Spacer—connector screw	AHH6247	30	1			
18	Pipe—oil gauge—flexible	AHH6554	31	1			
19	**Gauge—fuel**	**BHA4214**	32	1			
20	Ring (rubber)	17H1642	33	1			
21	Strap—fixing—and lamp holder (complete)	AJH5185	34	1			
22	Washer—spring	27H387	35	1			
23	Nut—thumb	17H932	36	1			

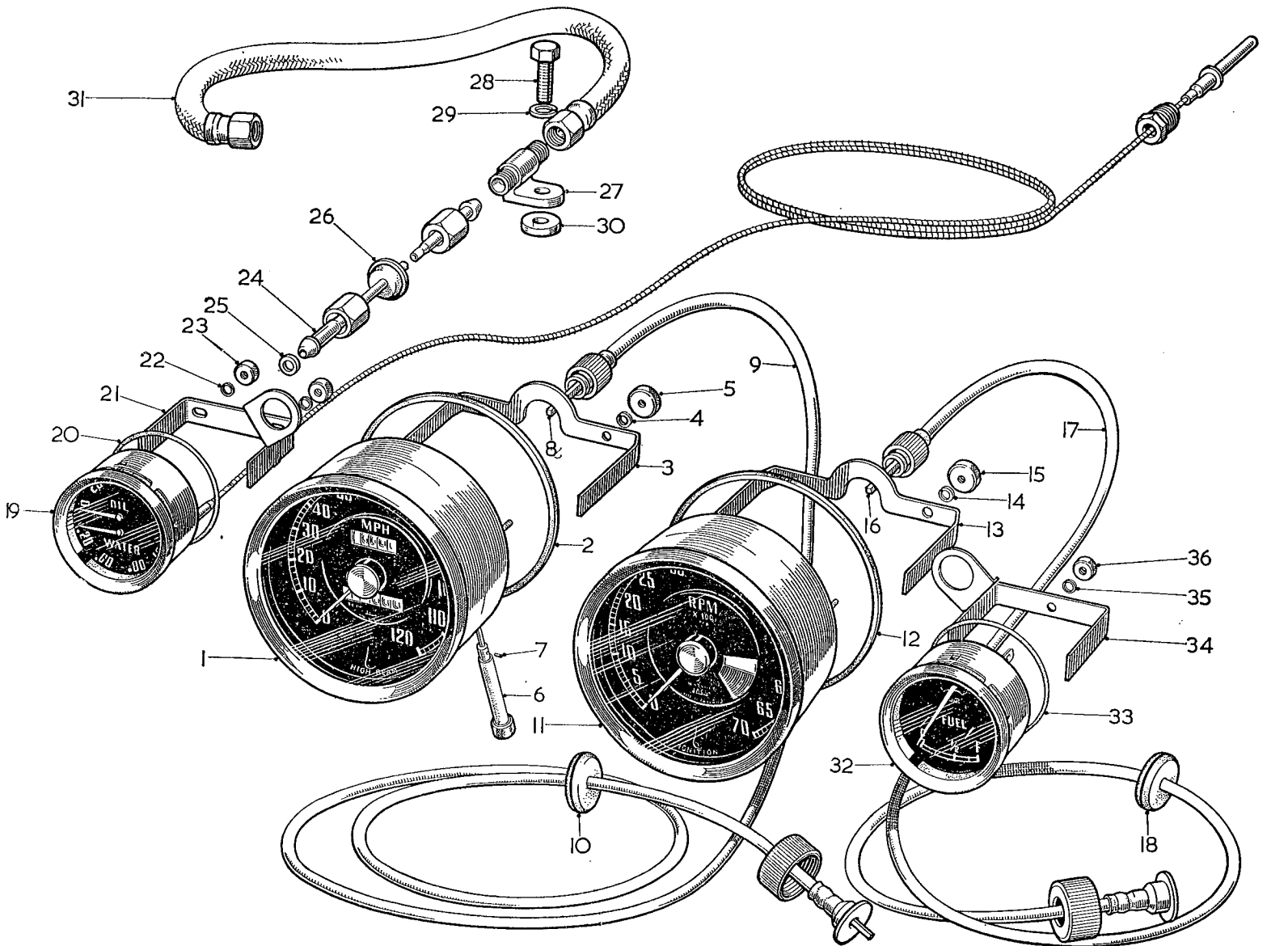

To face page O.2

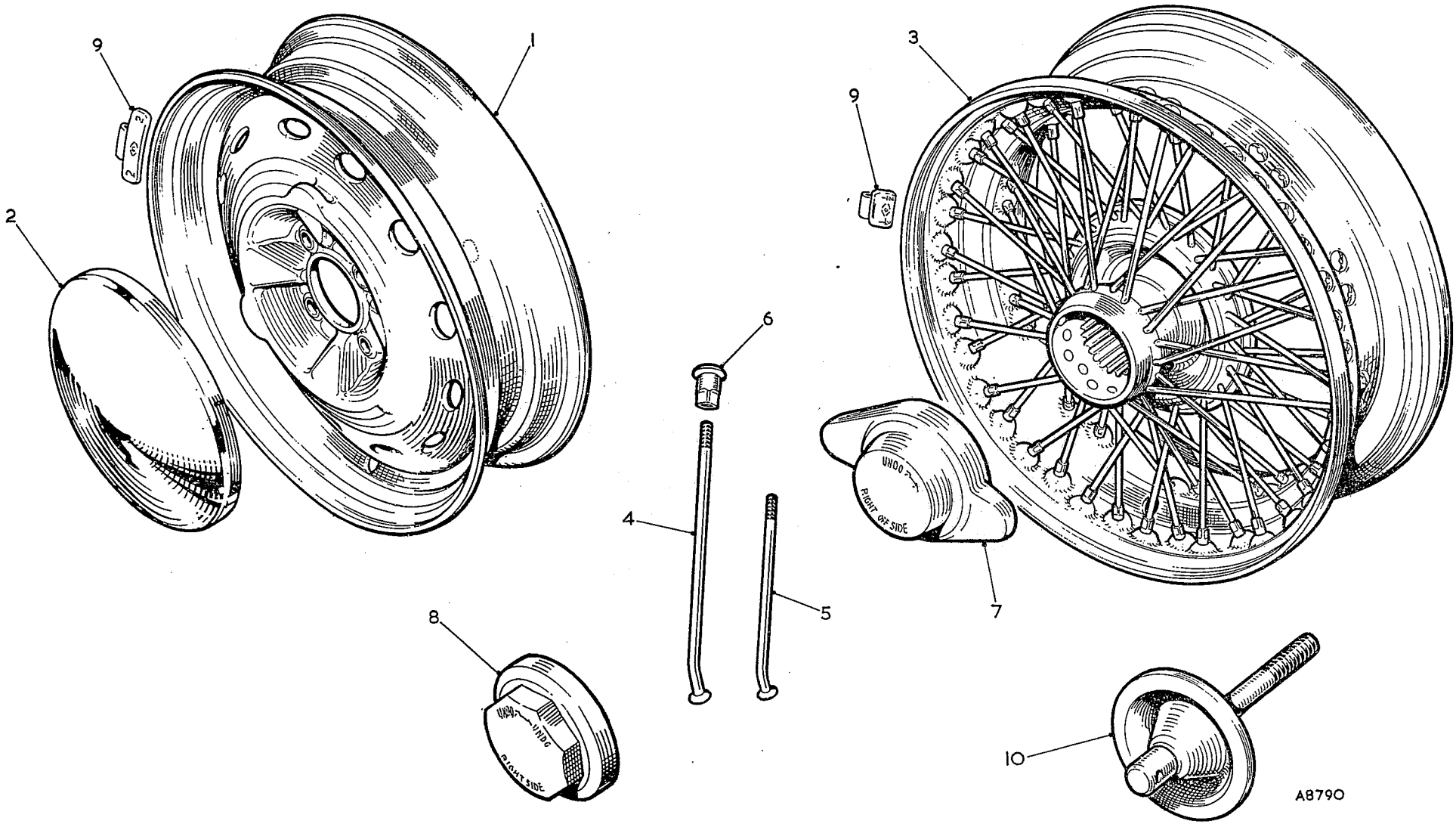

To face page P.1

WHEELS

Item No.	DESCRIPTION	Commencing (C) GHN3/101 Part Number	Illus. No.	Qty. per Veh.	MODIFICATIONS New Part Number	MODIFICATIONS Change Point	REMARKS
1	**Wheel—disc**	**AHH6132**	1	5			
2	Cap—hub—disc wheel	AHH6297	2	4			
3	**Wheel—wire**	**AHH6487**	3	5			
4	Spoke—long	17H2078	4	100			
5	Spoke—short	17H2077	5	200			
6	Nipple for spoke	7H1709	6	300			
7	Cap—hub—wire wheel RH side (L.H.T.)	1B8077	7	2			] Except Germany and Switzerland
8	Cap—hub—wire wheel LH side (R.H.T.)	1B8078		2			
9	Cap—hub—wire wheel RH side	AHH8008	8	2			] Germany and Switzerland only
10	Cap—hub—wire wheel LH side	AHH8009		2			
11	Weight—wheel balance ½ oz. (14·17 gr.)	1B8036	9	A/R			
12	Weight—wheel balance 1 oz. (28·35 gr.)	1B8037		A/R			
13	Weight—wheel balance 1½ oz. (42·52 gr.)	1B8038		A/R			
14	Weight—wheel balance 2 oz. (56·70 gr.)	1B8039		A/R			
15	Plate assembly—clamping—spare wheel mounting	AHH6483	10	1			

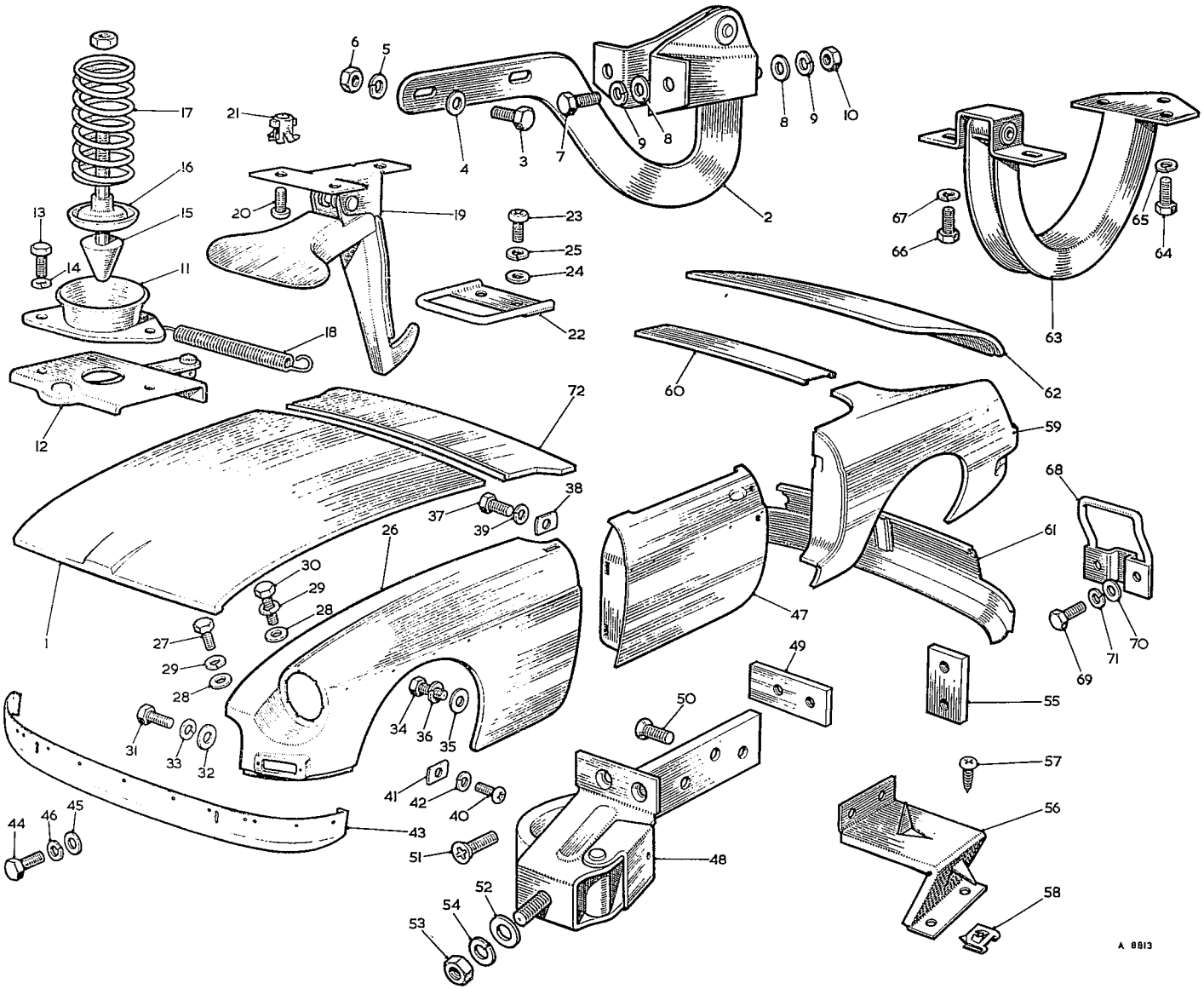

To face page R.1

BODY SHELL

Item No.	DESCRIPTION	Commencing (C) GHN8/101 Part Number	Illus. No.	Qty. per Veh.	MODIFICATIONS New Part Number	MODIFICATIONS Change Point	REMARKS
1	**Shell—body**	**AHH6089**		1			
2	**Bonnet assembly**	**HZA401**	1	1			
3	**Hinge assembly—bonnet**	**HZA364**	2	2			
4	Screw—hinge to lid	HZS0406	3	4			
5	Washer—plain	PWZ204	4	4			
6	Washer—spring	LWZ204	5	4			
7	Nut	FNZ104	6	4			
8	Screw—hinge to bulkhead	HZS0405	7	4			
9	Washer—plain	PWZ204	8	6			
10	Washer—spring	LWZ204	9	6			
11	Nut	FNZ104	10	2			
12	Cup—lock locating	AHA5543	11	1			
13	**Plate assembly—catch**	**4G3035**	12	1			
14	Screw—cup and plate to body	HZS0404	13	3			
15	Washer—spring	LWZ204	14	3			
16	Pin—bonnet lock	14G2444	15	1			
17	Thimble—bonnet lock	4G3676	16	1			
18	Spring—bonnet lock	4G1588	17	1			
19	Spring—catch plate return	4G2494	18	1			
20	**Catch assembly—safety**	**HZA332**	19	1			
21	Screw—catch to bonnet	PMZ0308	20	3			
22	Nut—anchor	BHA4338	21	3			
23	Bracket—safety catch	AHA5617	22	1			
24	Screw—bracket to body	PMZ0308	23	2			
25	Washer—plain	PWZ203	24	2			
26	Washer—spring	LWZ203	25	2			
27	**Wing assembly—front RH**	**HZA409**		1			
28	**Wing assembly—front LH**	**HZA410**	26	1			
29	Screw—wing top	HZS0505	27	16			
30	Washer—plain	PWZ205	28	18			
31	Washer—spring	LWZ205	29	18			
32	Screw—wing top	HZS0508	30	2			
33	Screw—wing front lower	HZS0405	31	4			
34	Washer—plain	PWZ204	32	4			
35	Washer—spring	LWZ204	33	4			
36	Screw—wing rear	HZS0406	34	8			
37	Washer—plain	PWZ204	35	8			
38	Washer—spring	LWZ204	36	8			
39	Screw—wing top inner	HZS0508	37	6			
40	Plate—washer	AFH2627	38	6			
41	Washer—spring	LWZ205	39	6			
42	Screw—wing to sill	PMZ0308	40	6			
43	Plate—washer	AFH2546	41	6			
44	Washer—spring	LWZ203	42	6			

Item No.	DESCRIPTION	Commencing (C) GHN3/101 Part Number	Illus. No.	Qty. per Veh.	MODIFICATIONS New Part Number	MODIFICATIONS Change Point	REMARKS
	Body Shell—*continued*						
1	Panel—front fairing	HZA132	43	1			
2	Screw—fairing panel to body	HZS0404	44	12			
3	Washer—plain	PWZ204	45	12			
4	Washer—spring	LWZ204	46	12			
5	**Door assembly—RH**	**HZA407**		1			
6	**Door assembly—LH**	**HZA408**	47	1			
7	**Hinge assembly—RH**	**HZA366**		2			
8	**Hinge assembly—LH**	**HZA367**	48	2			
9	Plate—tapping—hinge	HZA350	49	8			
10	Screw—hinge to door	CMZ0520	50	12			
11	Screw—hinge to body	CMZ0512	51	16			
12	Washer—plain	PWZ207	52	4			
13	Nut	FNZ107	53	4			
14	Washer—spring	LWZ207	54	4			
15	Plate—tapping—striker	HZA368	55	2			
16	Bracket—glass stop RH	HZA318		1			
17	Bracket—glass stop LH	HZA319	56	1			
18	Screw—bracket to door	PTZ1004	57	8			
19	Nut—Spire	PFS410	58	8			
20	**Wing assembly—rear RH**	**HZA411**		1			
21	**Wing assembly—rear LH**	**HZA412**	59	1			
22	Panel—rear decking	HZA133	60	1			
23	Panel assembly—body rear lower	HZA548	61	1			
24	**Lid assembly—boot**	**HZA419**	62	1			
25	**Hinge assembly—boot lid RH**	**AHA6314**		1			
26	**Hinge assembly—boot lid LH**	**AHA6315**	63	1			
27	Screw—hinge to lid	HZS0405	64	6			
28	Washer—spring	LWZ204	65	6			
29	Screw—hinge to body	HZS0405	66	6			
30	Washer—spring	LWZ204	67	6			
31	**Striker assembly—boot lid lock**	**HZA356**	68	1			
32	Screw—striker to body	HZS0406	69	2			
33	Washer—plain	PWZ104	70	2			
34	Washer—spring	LWZ204	71	2			
35	Diaphragm assembly—radiator			1			See Section C
36	**Panel assembly—shroud**	**HZA480**	72	1			

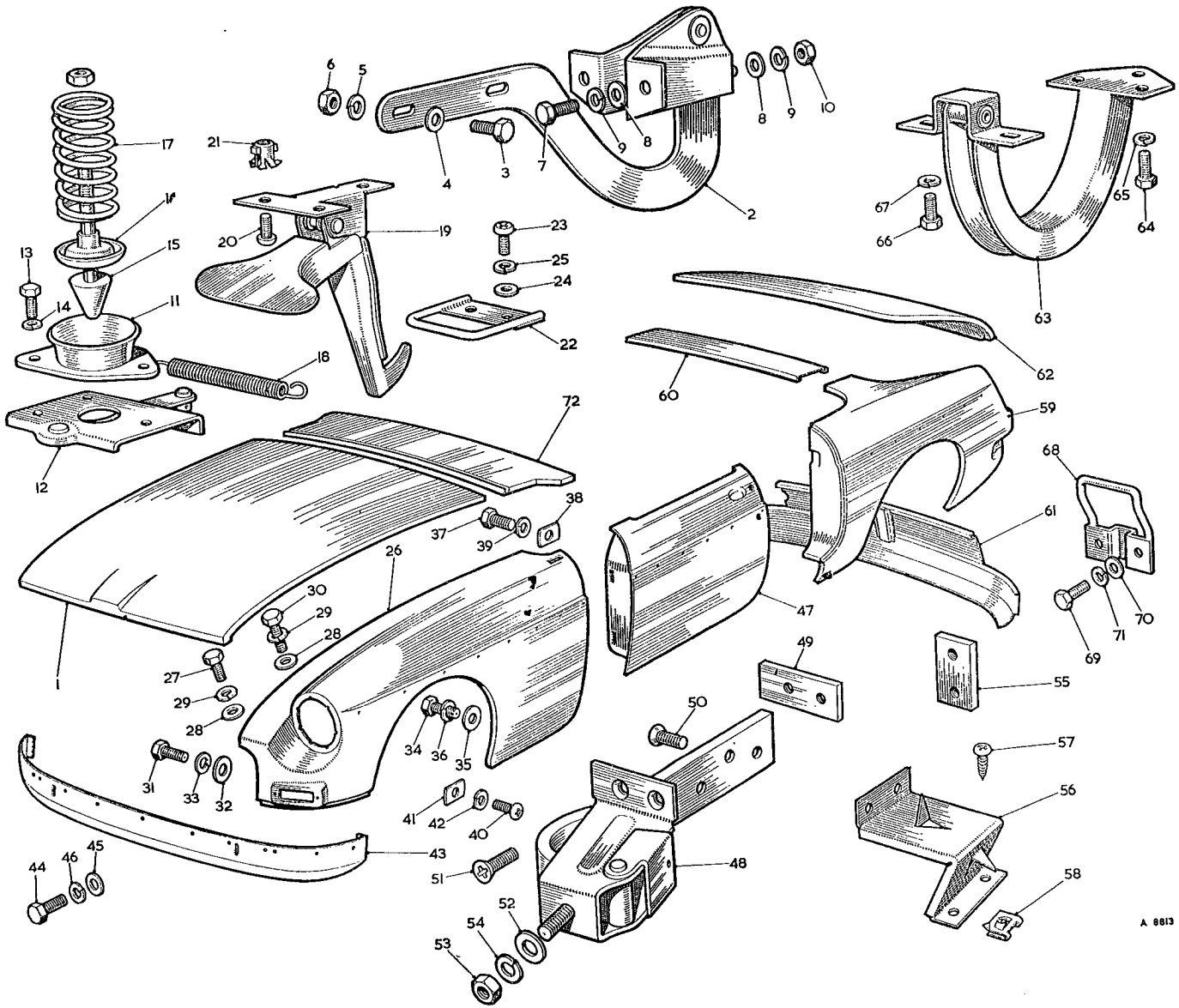

To face page R.2

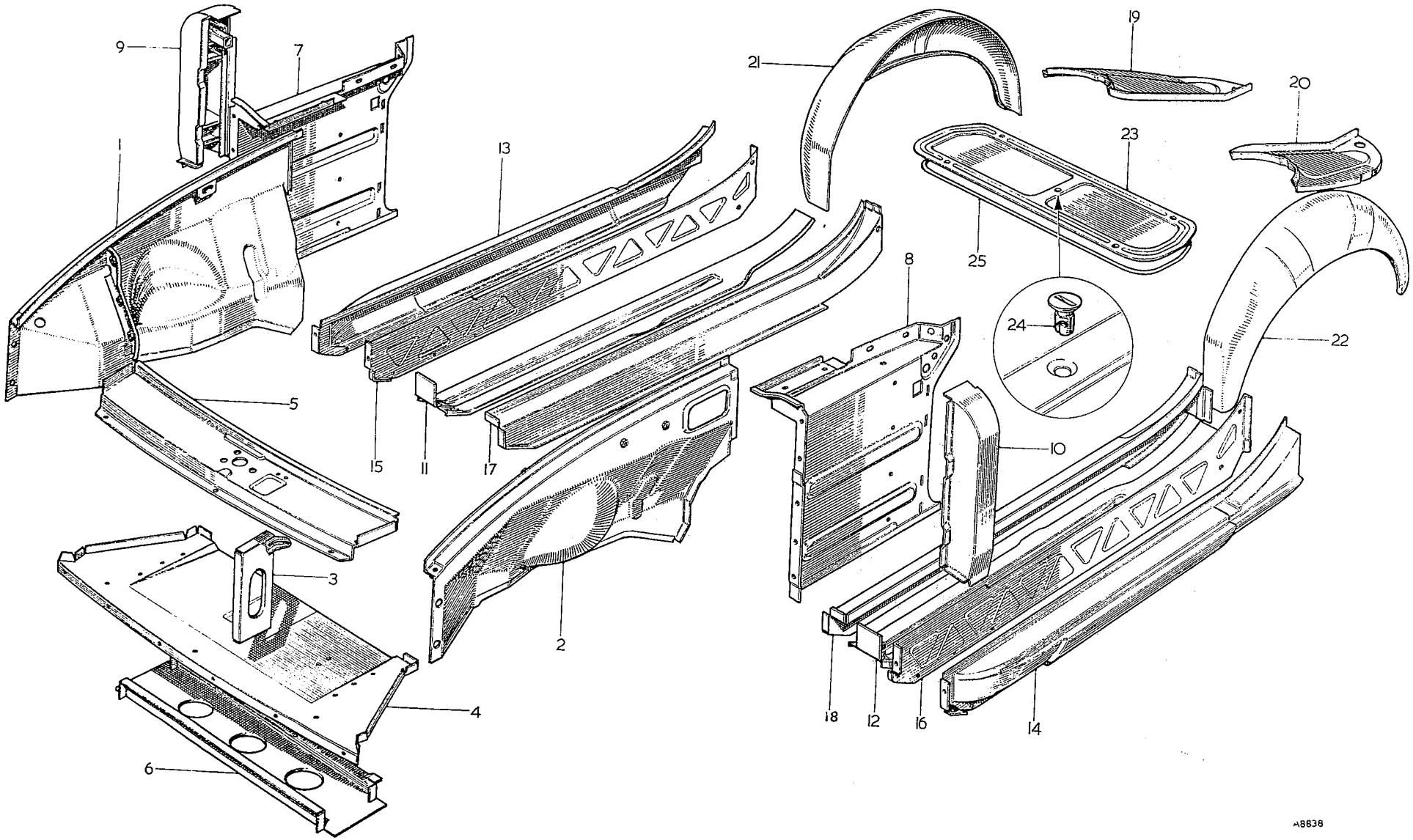

To face page R.3

Item No.	DESCRIPTION	Commencing (C) GHN3/101 Part Number	Illus. No.	Qty. per Veh.	MODIFICATIONS New Part Number	MODIFICATIONS Change Point	REMARKS
	Body Shell—*continued*						
1	**Underframe assembly**	**NSP**		1			
2	Wheel arch assembly—RH	HZA420	1	1			
3	Wheel arch assembly—LH	HZA421	2	1			
4	Bracket—reinforcement—bonnet lock platform	HZA461	3	1			
5	Panel—radiator duct assembly	HZA465	4	1			
6	Platform assembly—bonnet locking	HZA388	5	1			
7	Channel support—radiator duct	HZA171	6	1			
8	Panel—dash side assembly RH	HZA403	7	1			
9	Panel—dash side assembly LH	HZA404	8	1			
10	Panel—'A' post assembly RH	HZA442	9	1			
11	Panel—'A' post assembly LH	HZA443	10	1			
12	**Side-member assembly—bottom RH**	**HZA482**	11	1			
13	**Side-member assembly—bottom LH**	**HZA483**	12	1			
14	Panel assembly—sill outer RH	HZA496	13	1			
15	Panel assembly—sill outer LH	HZA497	14	1			
16	Panel—sill closing RH	HZA188	15	1			
17	Panel—sill closing LH	HZA189	16	1			
18	Side-member—inner RH	HZA236	17	1			
19	Side-member—inner LH	HZA237	18	1			
20	Panel—trunk floor outer RH	HZA160	19	1			
21	Panel—trunk floor outer LH	HZA161	20	1			
22	Panel—wheel arch rear outer RH	HZA138	21	1			
23	Panel—wheel arch rear outer LH	HZA139	22	1			
24	**Panel—battery access**	**AHH6716**	23	1			
25	Fastener—Dzus	AHH6845	24	5			
26	Rubber—sealing—battery access panel	AHH6352	25	1			

Item No.	DESCRIPTION	Commencing (C) GHN3/101 Part Number	Illus. No.	Qty. per Veh.	MODIFICATIONS New Part Number	MODIFICATIONS Change Point	REMARKS
	BONNET FITTINGS						
1	**Cable and knob—bonnet pull control**	**AHH6426**	1	1			
2	Stay—bonnet	AHH6325	2	1			
3	Washer—spring—stay to bonnet	AJD7732	3	1			
4	Washer—plain—stay to bonnet	PWZ105	4	1			
5	Clip—bonnet stay	AHH5460	5	1			
6	Screw—clip to bonnet	PTZ1004	6	2			
7	Seal—bonnet—rear	AHH6548	7	1			
8	**Grille—air intake**	**AHH6102**	8	1			
9	Push-on fix—grille to scuttle panel	BHA4082	9	5			
10	Buffer—side—bonnet (rubber)	AHH6523	10	4			
11	Screw—buffer to wing channel	PMZ0306	11	8			
12	Washer—spring—screw	LWZ203	12	8			
13	Nut—screw	FNZ103	13	8			
14	Pad assembly—sound deadening—front—bonnet top	AHH6761	14	1			
15	Pad assembly—sound deadening—rear—bonnet top	AHH6762	15	1			

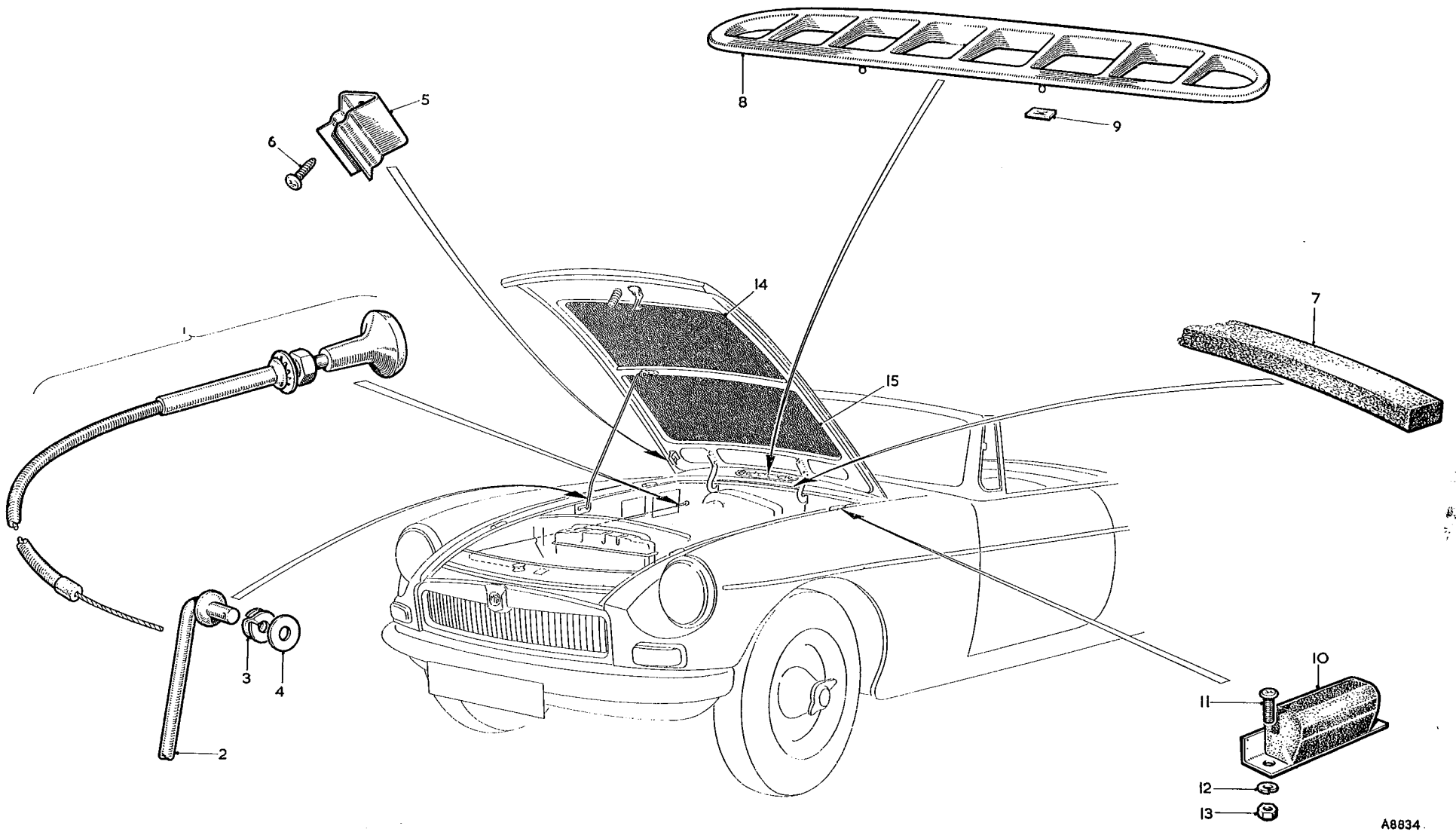

To face page R.4

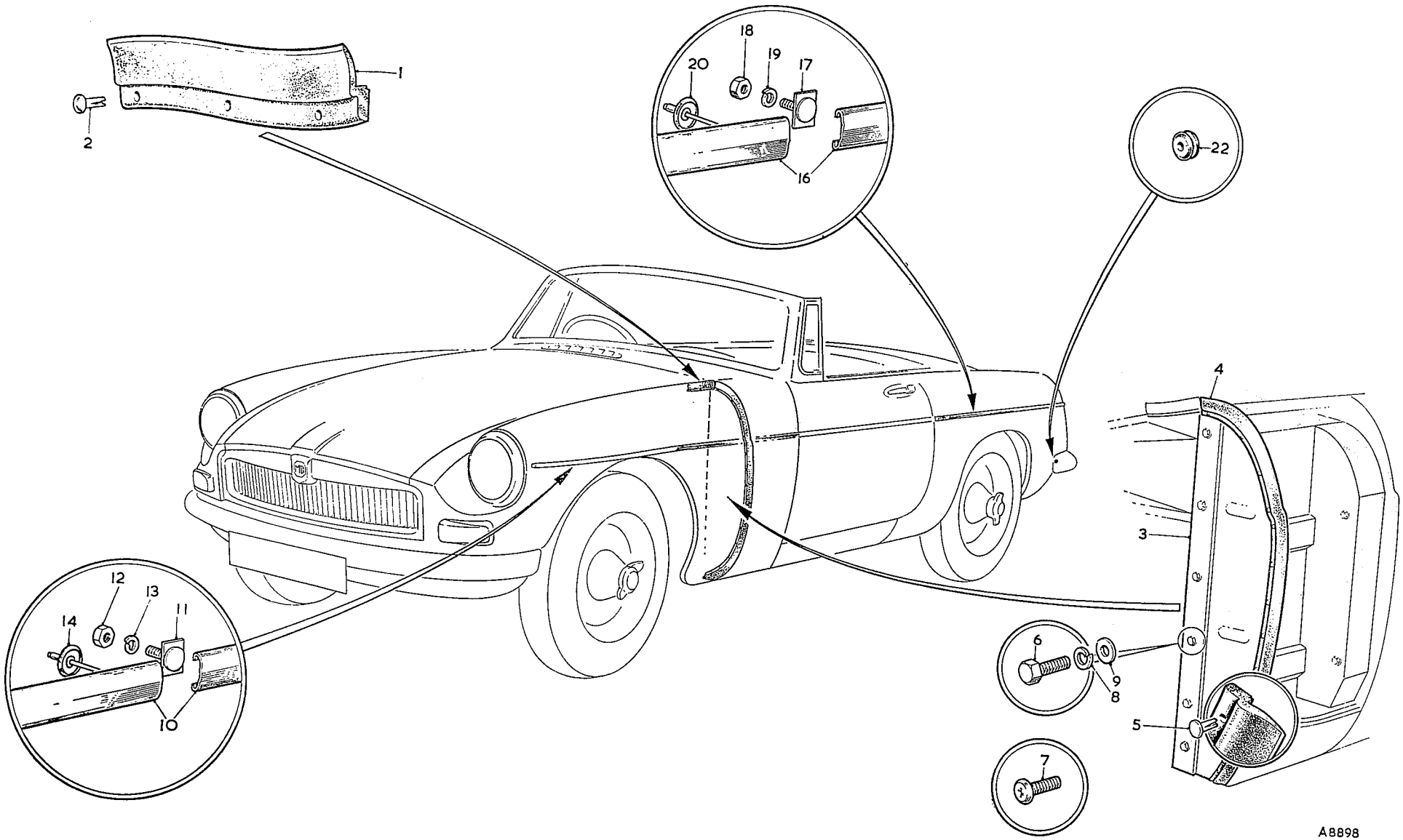

To face page R.5

Item No.	DESCRIPTION	Commencing (C) GHN3/101 Part Number	Illus. No.	Qty. per Veh.	MODIFICATIONS New Part Number	MODIFICATIONS Change Point	REMARKS
	WINGS						
1	Seal—RH front splash plate extension (rubber)	AHH6245	1	1			
2	Seal—LH front splash plate extension (rubber)	AHH6246		1			
3	Rivet—seal to body	BRP906	2	6			
4	**Panel assembly—baffle—front wing RH**	**AHH6718**		1			
5	**Panel assembly—baffle—front wing LH**	**AHH6719**	3	1			
6	Seal—baffle—front wing RH	AHH6241		1			
7	Seal—baffle—front wing LH	AHH6242	4	1			
8	Rivet—seal to baffle	BRP906	5	28			
9	Screw—panel to body	HZS0405	6	12			
10	Screw—panel to body	PMZ0410	7	2			
11	Washer—spring	LWZ204	8	14			
12	Washer—plain	PWZ204	9	14			
13	Moulding—front wing—RH	AHH6103		1			
14	Moulding—front wing—LH	AHH6104	10	1			
15	Plate—stud—moulding	AHH6360	11	2			
16	Nut—stud plate	FNZ103	12	2			
17	Washer—spring	LWZ203	13	2			
18	Clip—moulding	AHH6361	14	16			
19	Rivet—clip	DMP0721	15	16			
20	Moulding—rear wing—RH	AHH6107		1			
21	Moulding—rear wing—LH	AHH6108	16	1			
22	Plate—stud—moulding	AHH6360	17	2			
23	Nut—stud plate	FNZ103	18	2			
24	Washer—spring	LWZ203	19	2			
25	Clip—moulding	AHH6361	20	14			
26	Rivet—clip	DMP0721	21	14			
27	Grommet—blanking—rear wing outer filler panel	RFN204	22	2			

Item No.	DESCRIPTION	Commencing (C) GHN3/101 Part Number	Illus. No.	Qty. per Veh.	MODIFICATIONS New Part Number	MODIFICATIONS Change Point	REMARKS
	BOOT LID FITTINGS						
1	**Push-button assembly—boot lid lock**	**AHH6179**	1	1			
2	Key	ANK4646		2			Always quote key number
3	Nut—lock	ADA5698	2	1			
4	Washer—seating—push-button assembly	AHH6180	3	1			
5	Latch assembly—boot lid lock	AHH6181	4	1			
6	Screw—latch to boot lid	PMZ0308	5	4			
7	Washer—plain—screw	PWZ103	6	4			
8	Washer—spring—screw	LWZ203	7	4			
9	Stay—boot lid	AHH6326	8	1			
10	Washer—spring—stay	AJD7722	9	1			
11	Washer—plain	PWZ104	10	2			
12	Clip—spring—stay	128978	11	1			
13	Screw—clip to boot lid	PTZ603	12	2			
14	Rubber—sealing—boot lid	AHH6535	13	1			
15	**Motif—'MGB'**	**AHH6079**	14	1			
16	Push-on fix—motif to boot lid	BHA4082	15	2			
17	**Surround—boot lid badge**	**AHH5261**	16	1			
18	**Letter 'M'**	**ADH2475**	17	1			
19	**Letter 'G'**	**ADH2476**	18	1			
20	Nut—Spire—surround and badge	PFS103	19	13			

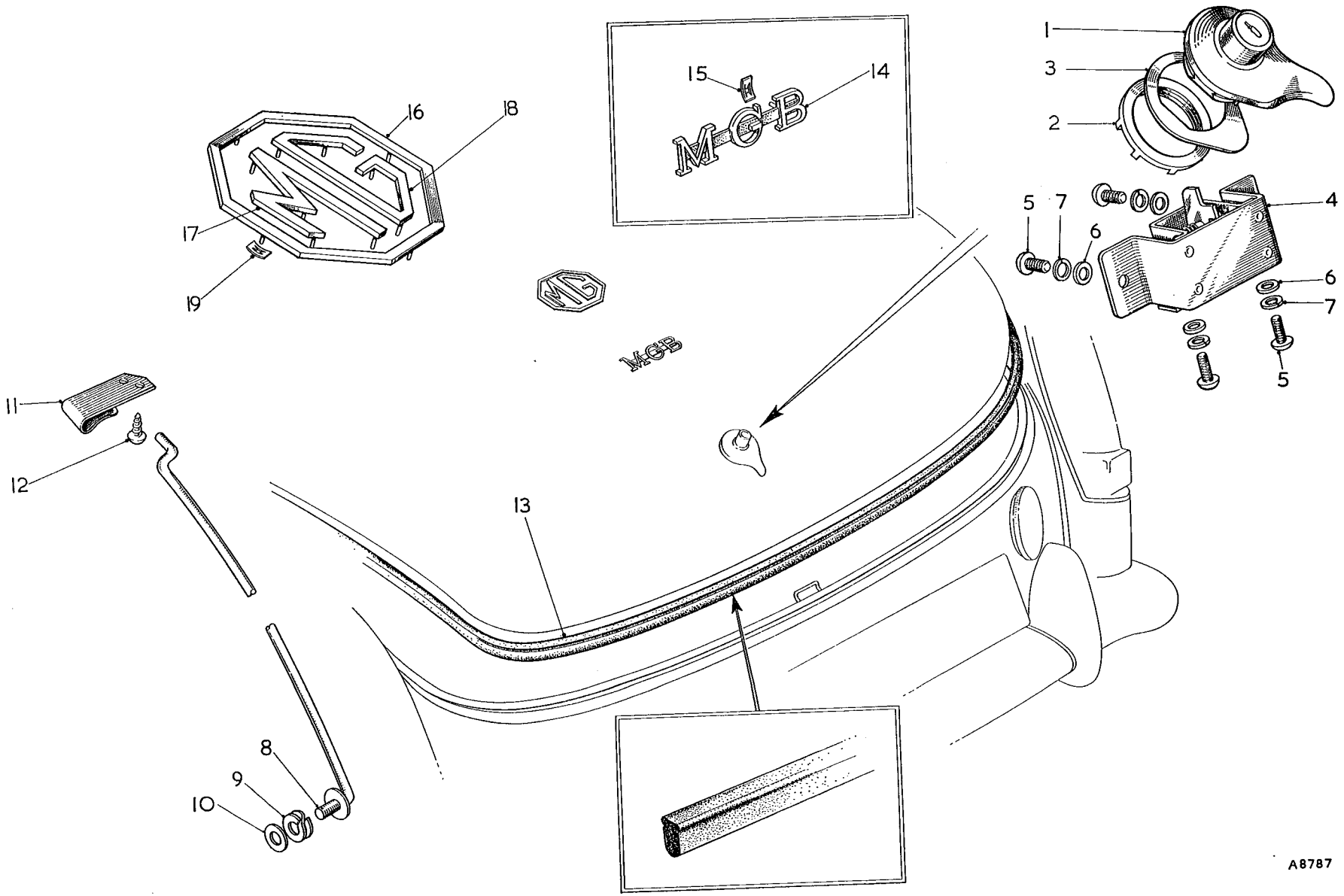

To face page R.6

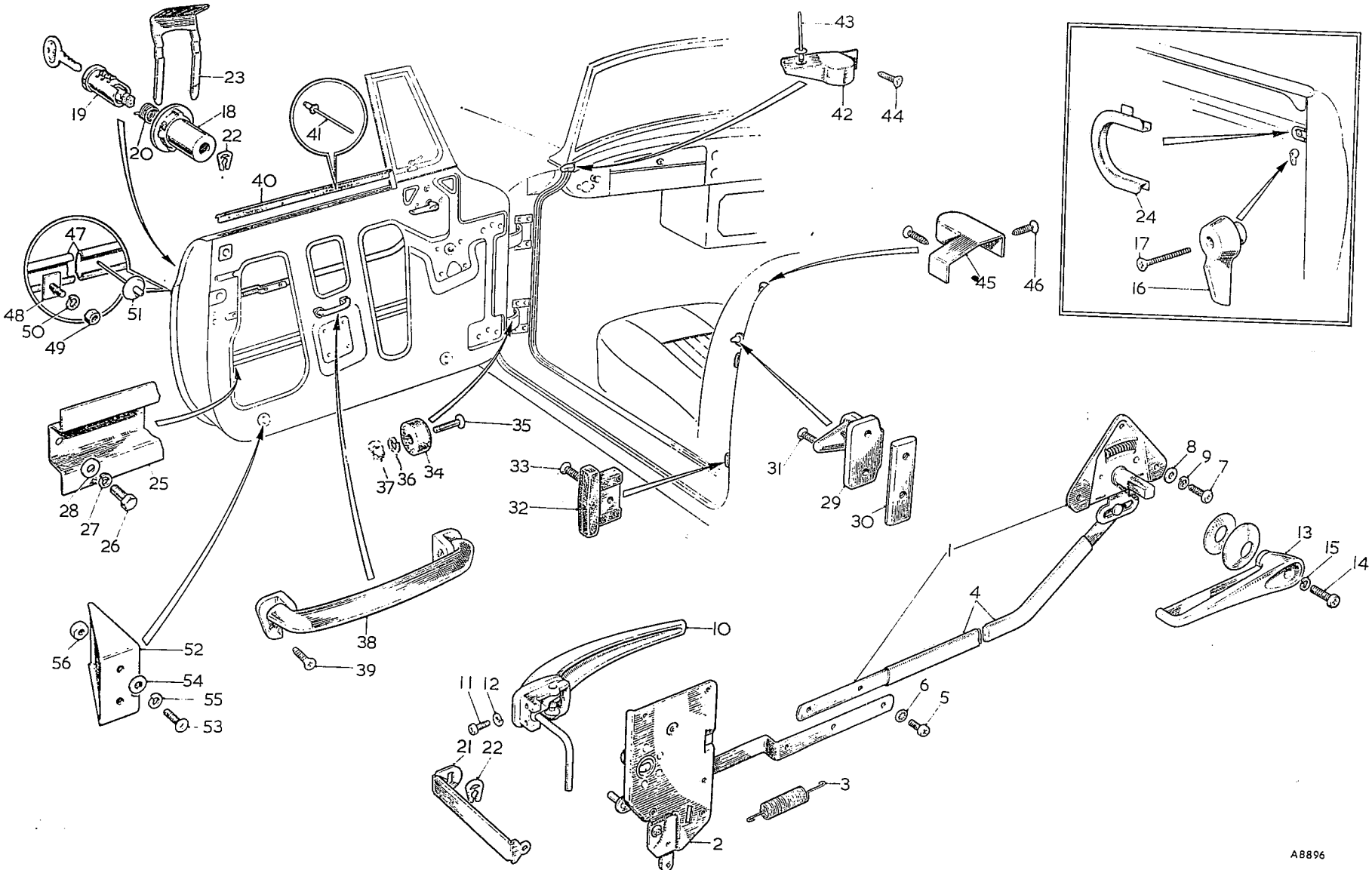

To face page R.7

Item No.	DESCRIPTION	Commencing (C) GHN3/101 Part Number	Illus. No.	Qty. per Veh.	MODIFICATIONS New Part Number	MODIFICATIONS Change Point	REMARKS
	DOOR FITTINGS						
1	**Mechanism assembly—remote control RH**	**AHH6666**		**1**			
2	**Mechanism assembly—remote control LH**	**AHH6667**	**1**	**1**			
3	**Lock assembly—slam—RH**	**AHH6668**		**1**			
4	**Lock assembly—slam—LH**	**AHH6669**	**2**	**1**			
5	Spring—tension—remote control link	AHH6670	3	2			
6	Sleeve—anti-rattle—remote control link	AHH6671	4	2			
7	Screw—remote control to slam lock assembly	PMZ0306	5	4			
8	Washer—shakeproof	LWZ403	6	4			
9	Screw—lock and remote control to door	PMZ0308	7	14			
10	Washer—plain	PWZ203	8	14			
11	Washer—spring	LWZ203	9	14			
12	**Handle—door RH**	**AHH6661**		**1**			
13	**Handle—door LH**	**AHH6662**	**10**	**1**			
14	Screw—handle to door	PMP0306	11	4			
15	Washer—spring	LWZ203	12	4			
16	**Handle—remote control**	**ADA5668**	**13**	**2**			
17	Screw—handle to remote control	ADH834	14	4			
18	Washer—spring	LWZ203	15	4			
19	Knob—inside locking	AHH6513	16	1			] Passenger door
20	Screw—knob to lock	RMP0212	17	1			
21	Housing—private lock	AHH6672	18	2			
22	**Locking device**	**AHH6673**	**19**	**2**			
23	Key	ANK4646		4			Always quote key number
24	Spring—self centre	AHH6674	20	2			
25	Link—operating	AHH6675	21	2			
26	Clip—Anderton	AHH6676	22	4			
27	Clip—retaining—private lock	AHH6249	23	2			
28	Finisher—lock	AHH6547	24	2			
29	Stiffener—longitudinal	HZA383	25	2			
30	Screw—stiffener to door	HZS0404	26	4			
31	Washer—spring	LWZ204	27	4			
32	Washer—plain	PWZ104	28	4			
33	Striker	AFH1684	29	2			
34	Plate—tapping	HZA368	30	2			
35	Screw—striker to body	CMZ0412	31	4			
36	Buffer assembly—door	AHH6273	32	4			
37	Screw—buffer to door	RMZ0308	33	4			
38	Buffer—rubber	AHH6745	34	4			
39	Screw—buffer to door hinge	PMZ0208	35	4			
40	Washer—spring	LWZ202	36	4			
41	Nut—screw	CNZ102	37	4			

Item No.	DESCRIPTION	Commencing (C) GHN3/101 Part Number	Illus. No.	Qty. per Veh.	MODIFICATIONS New Part Number	MODIFICATIONS Change Point	REMARKS
	Door Fittings—*continued*						
1	**Pull assembly—door**	**ADA5874**	38	2			
2	Screw—pull to door	RMZ0308	39	4			
3	Seal—waist—door—RH (rubber)	AHH6348		1			
4	Seal—waist—door—LH (rubber)	AHH6349	40	1			
5	Rivet—seal to outer door panel	DMP0819	41	8			
6	Finisher—door seal—front—RH	AHH6270		1			
7	Finisher—door seal—front—LH	AHH6271	42	1			
8	Rivet—pop	DAP0820	43	2			
9	Screw—finisher	CTP604	44	2			
10	Finisher—door seal—rear—RH	AHH6323		1			
11	Finisher—door seal—rear—LH	AHH6324	45	1			
12	Screw—finisher	CTP604	46	4			
13	Moulding—side—door—RH	AHH6105		1			
14	Moulding—side—door—LH	AHH6106	47	1			
15	Plate—stud—moulding	AHH6360	48	2			
16	Nut—stud plate	FNZ103	49	2			
17	Washer—spring	LWZ203	50	2			
18	Clip—moulding	AHH6361	51	12			
19	Rivet—clip	DMP0721	52	12			

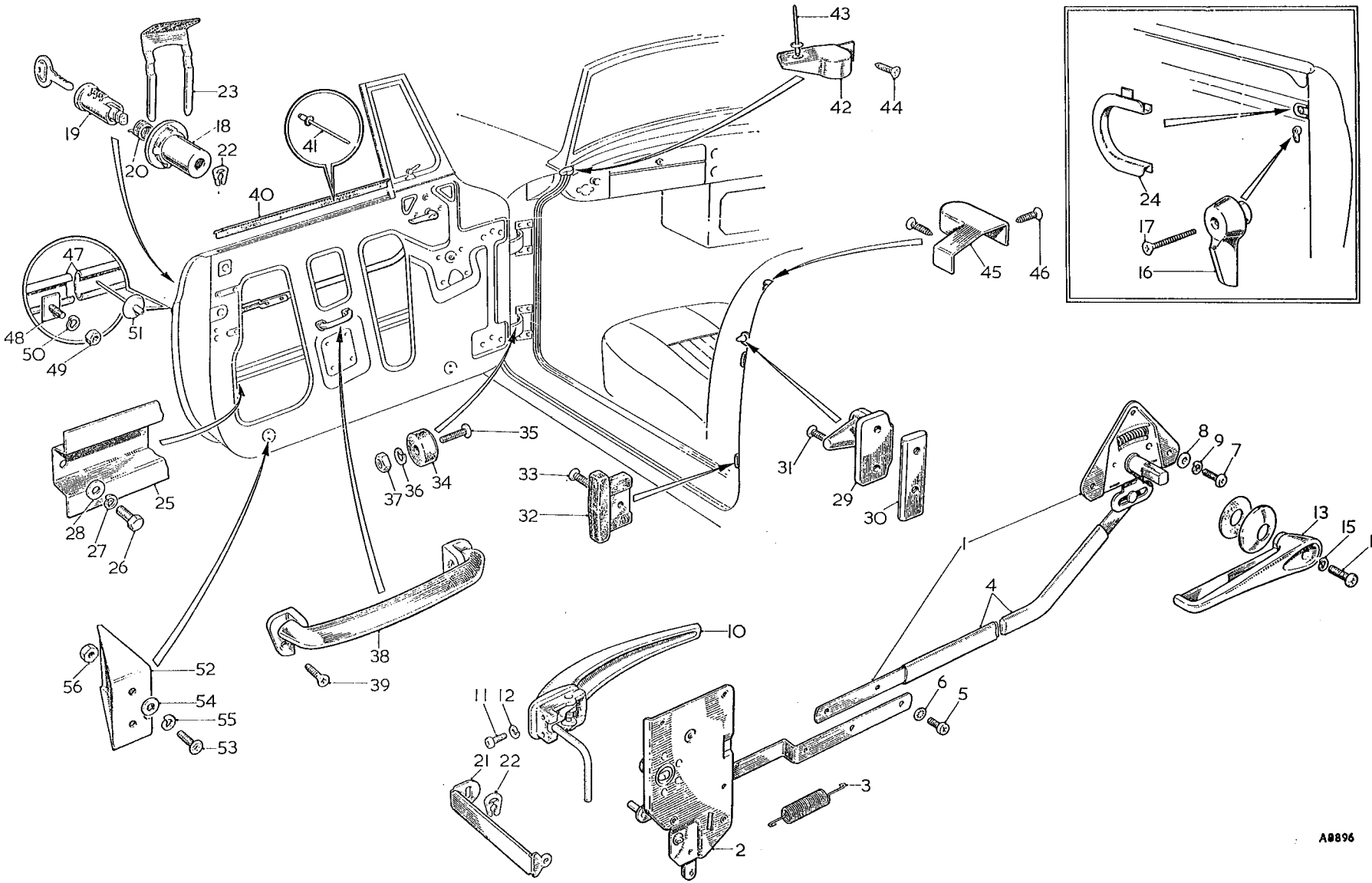

To face page R.8

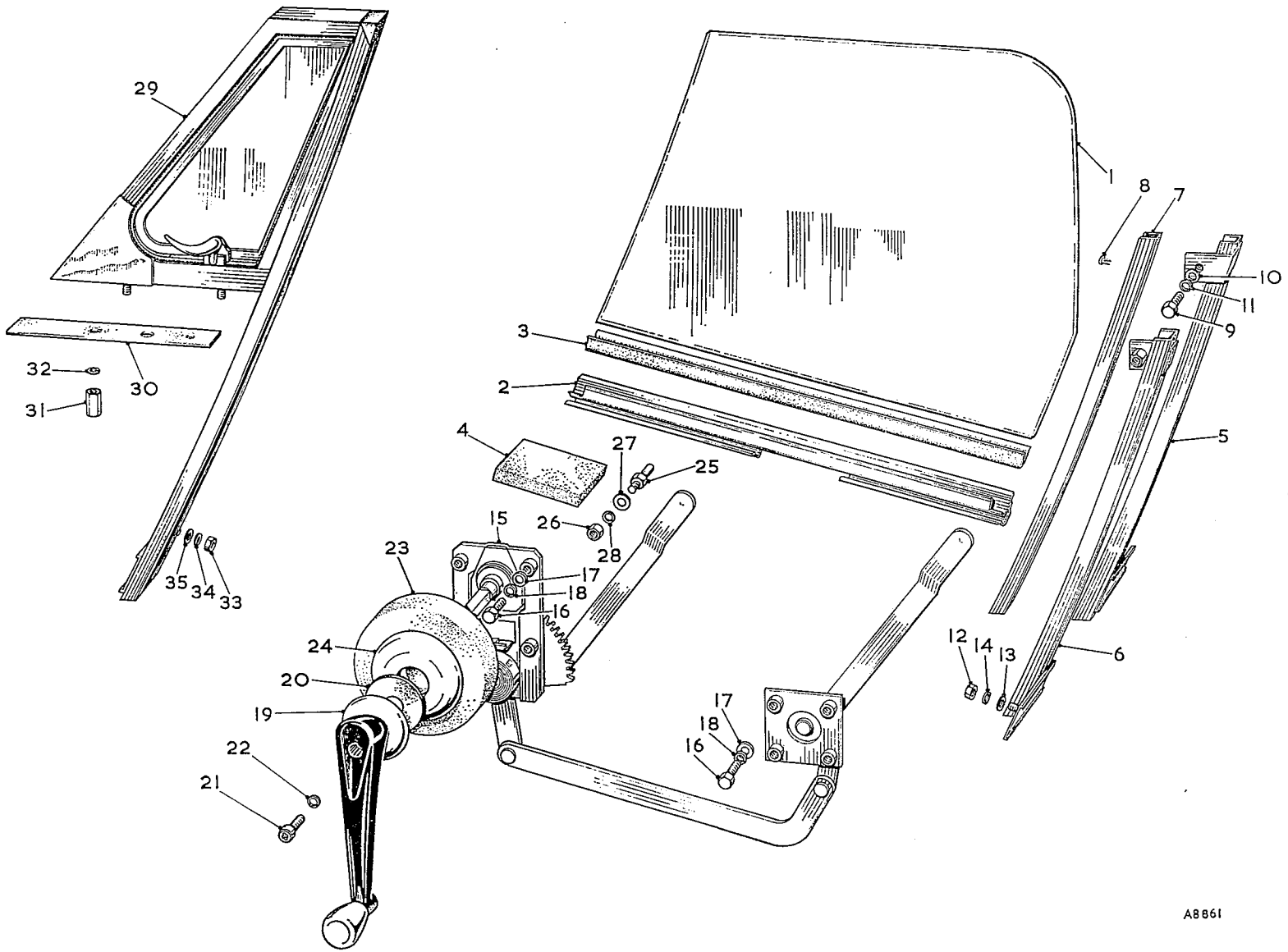

To face page R.9

Item No.	DESCRIPTION	Commencing (C) GHN3/101 Part Number	Illus. No.	Qty. per Veh.	MODIFICATIONS New Part Number	MODIFICATIONS Change Point	REMARKS
	DOOR WINDOWS AND WINDOW MECHANISM						
1	**Glass—door—RH**	**AHH6380**		1			
2	**Glass—door—LH**	**AHH6381**	1	1			
3	Channel—lower	AHH6346	2	2			
4	Channel—glazing	AHH6347	3	2			
5	Buffer—glass stop bracket	AHH6434	4	2			
6	**Channel assembly—rear RH**	**AHH6303**	5	1			
7	**Channel assembly—rear LH**	**AHH6304**	6	1			
8	Flexible run—rear—glass	AHH6550	7	2			
9	Rivet—glass run to channel	BRP1104	8	8			
10	Screw—top fixing channel to door	PMZ0408	9	2			
11	Washer—plain	PWZ104	10	2			
12	Washer—spring	LWZ204	11	2			
13	Nut—lower fixing channel to door	FNZ104	12	2			
14	Washer—plain	PWZ104	13	2			
15	Washer—spring	LWZ204	14	2			
16	**Regulator assembly—window—RH**	**HZA360**		1			
17	**Regulator assembly—window—LH**	**HZA361**	15	1			
18	Screw—regulator to door	HZS0404	16	16			
19	Washer—plain	PWZ204	17	16			
20	Washer—spring	LWZ204	18	16			
21	**Handle—regulator**	**ADA5667**	19	2			
22	Washer—handle (fibre)	ADA5669	20	4			
23	Screw—handle to regulator	ADH834	21	2			
24	Washer—spring	LWZ203	22	2			
25	Pad—regulator handle	AHH6337	23	2			
26	Escutcheon—regulator handle	AHH6336	24	2			
27	Stop—window regulator arm	AHH6289	25	2			
28	Nut—stop to door	FNZ205	26	2			
29	Washer—plain (large)	PWZ205	27	2			
30	Washer—spring	LWZ205	28	2			
31	**Ventilator assembly—RH**	**AHH6341**		1			
32	**Ventilator assembly—LH**	**AHH6342**	29	1			
33	Washer—seating—RH ventilator	AHH6344		1			
34	Washer—seating—LH ventilator	AHH6345	30	1			
35	Nut—ventilator to door	AHH6343	31	4			
36	Washer—spring	LWZ204	32	4			
37	Nut—lower fixing ventilator to door	FNZ104	33	2			
38	Washer—spring	LWZ204	34	2			
39	Washer—plain	PWZ104	35	2			
	Hinge Assy. RH ventilator	AHH2505			Supre		
	" LH "	AHH2506			Supre		

Item No.	DESCRIPTION	Commencing (C) GHN3/101 Part Number	Illus. No.	Qty. per Veh.	MODIFICATIONS New Part Number	MODIFICATIONS Change Point	REMARKS
	WINDSCREEN						
1	**Windscreen assembly**	**AHH6096**	1	1			
2	Pillar—RH	AHH6384	2	1			
3	Pillar—LH	AHH6385	3	1			
4	Rail—top	AHH6516	4	1			
5	Rail—bottom	AHH6517	5	1			
6	Screw—pillar to top rail	CMP0308	6	4			
7	Screw—pillar to top rail	CMP0310	7	2			
8	Rod—windscreen—centre	AHH6411	8	1			
9	Nut—centre rod to top bracket	AHH6495	9	1			
10	Nut—centre rod	FNP103	10	1			
11	Washer—plain	PWP203	11	1			
12	Washer—spring	LWZ203	12	1			
13	**Glass—windscreen—laminated**	**AHH6388**	13	1			
14	Rubber—glazing	AHH6412	14	1			
15	Reinforcement—bottom RH corner	AHH6394	15	1			
16	Reinforcement—bottom LH corner	AHH6395	16	1			
17	Screw—bottom reinforcement to pillar	CMZ0307	17	4			
18	Screw—bottom rail to reinforcement	AHH6945	18	4			
19	Seal—windscreen to body	AHH6402	19	1			
20	Seal—windscreen to pillar—RH	AHH6403	20	1			
21	Seal—windscreen to pillar—LH	AHH6404	21	1			
22	Retainer—seal—pillar	AHH6409	22	2			
23	Rivet—seal retainer to pillar	AHH6536	23	8			
24	Fastener—dot	7H9878	24	2			
25	Rivet—pop—fastener to pillar	DMP3040	25	2			
26	Washer—upper foot to body	AHH6393	26	4			
27	Screw—pillar foot to body	ZCS0610	27	2			
28	Washer—spring—screw	LWZ206	28	4			
29	Packing—outer—windscreen pillar	AHH6413	29	2			
30	Packing—inner—windscreen pillar	AHH6414	30	2			
31	Screw—packing to body	PPZ0316	31	2			
32	Washer—plain—screw	PWZ203	32	2			
33	Washer—spring—screw	LWZ203	33	2			
34	Packing—centre fixing—windscreen to body	AHH6392	34	1			
35	Screw—centre fixing—windscreen to body	HPS0406	35	2			
36	Washer—plain—screw	PWP104	36	2			
37	Washer—spring—screw	LWZ204	37	2			
38	Grommet—seal—pillar foot—RH	AHH6407	38	1			
39	Grommet—seal—pillar foot—LH	AHH6408	39	1			

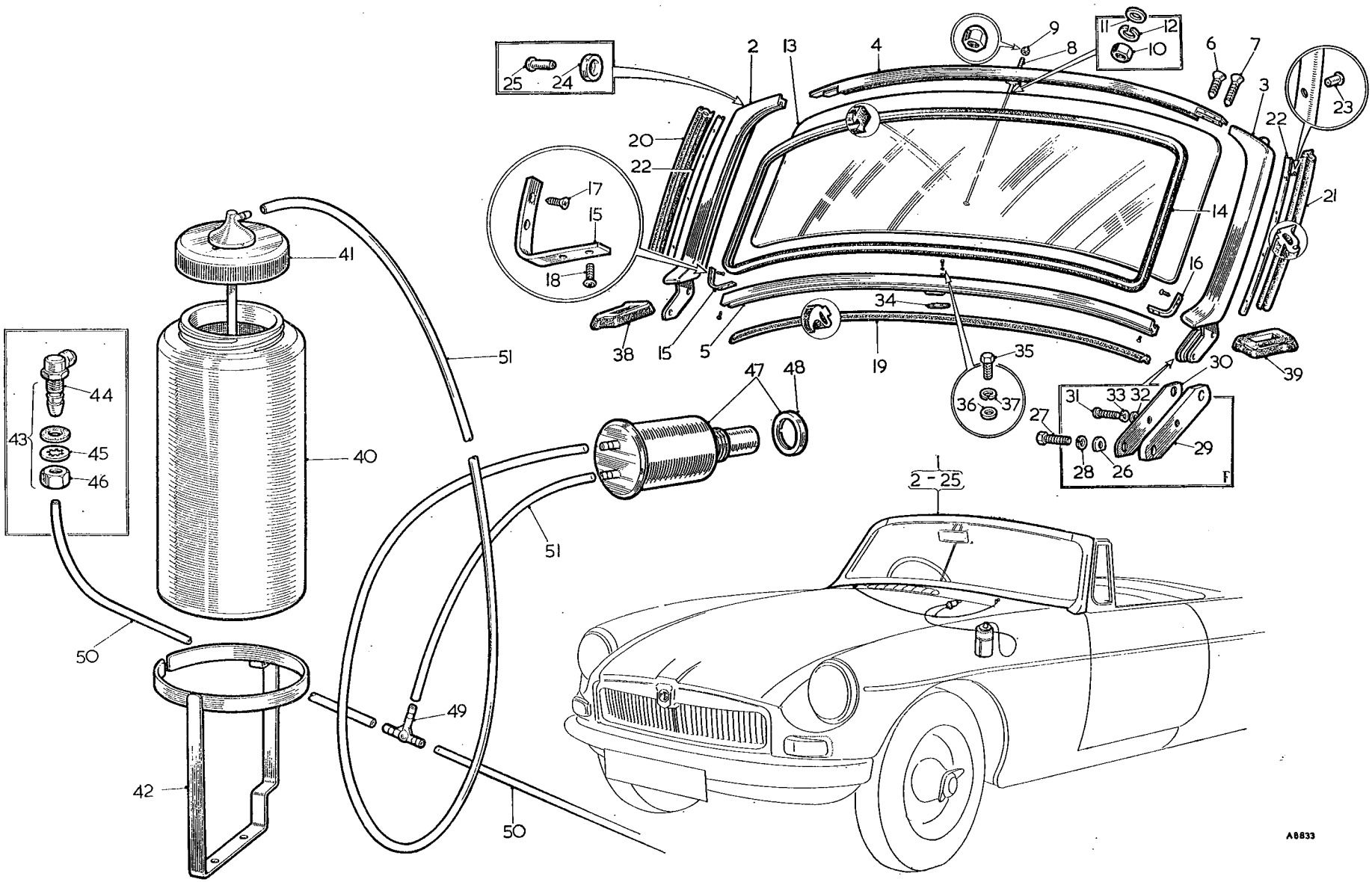

To face page R.10

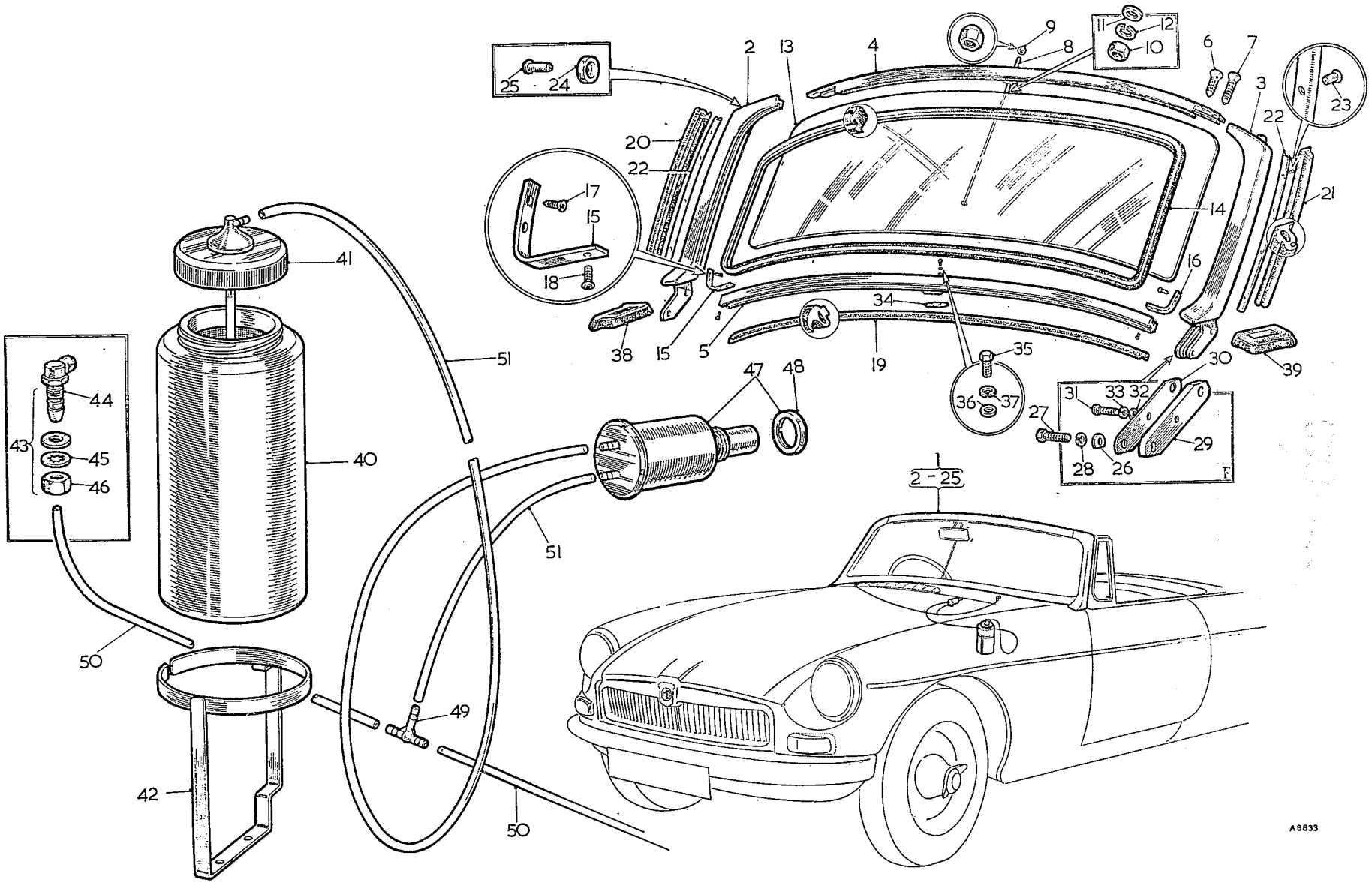

To face page R.11

Item No.	DESCRIPTION	Commencing (C) GHN3/101 Part Number	Commencing (C) GHN3/101 Illus. No.	Qty. per Veh.	MODIFICATIONS New Part Number	MODIFICATIONS Change Point	REMARKS
	WINDSCREEN WASHER						
1	**Container**			1			
2	Cap assembly			1			
3	Bracket			1			
4	**Jet assembly**			2			
5	Jet			2			
6	Washer (brass)			2			
7	Washer (rubber)			2			
8	Nut			2			
9	**Control assembly**			1			
10	Nut—control			1			
11	Washer—lock			1			
12	Nut—retaining			1			
13	Connection—3-way			1			
14	Tubing			A/R			Only available in multiples of feet

Item No.	DESCRIPTION	Commencing (C) GHN3/101 Part Number	Illus. No.	Qty. per Veh.	MODIFICATIONS New Part Number	MODIFICATIONS Change Point	REMARKS
	HOOD						
1	**Cover assembly and header rail complete—Red**	**AHH6835**	1	1			
2	**Cover assembly and header rail complete—Grey**	**AHH6836**		1			
3	**Cover assembly and header rail complete—Blue**	**AHH6837**		1			
4	Cover assembly—hood—Red	AKE4601		1			
5	Cover assembly—hood—Grey	AKE4602		1			
6	Cover assembly—hood—Blue	AKE4603		1			
7	Fastener assembly—hood	AHH6262	2	2			
8	Washer—spring	LWZ203	3	4			
9	Washer—plain	PWZ203	4	4			
10	Screw—fastener	PMZ0308	5	2			
11	Pad—header rail	AHH6439	6	2			
12	Screw—pad to header rail	CTZ604	7	4			
13	Seal—header rail	AHH6438	8	1			
14	Retainer—seal	AHH6440	9	1			
15	Tongue—hood fastener	AHH6884	10	2			
16	Back-plate—hood fastener	AHH6882	11	2			
17	Rivet—tongue and back-plate to hood	DMP0829	12	8			
18	Socket—fastener	LFS107	13	8			
19	Washer—fastener socket	LFS100	14	8			
20	**Frame assembly—hood—RH**	**AHH6109**	15	1			
21	**Frame assembly—hood—LH**	**AHH6110**	16	1			
22	Socket—locating—hood	AHH6524	17	2			
23	Screw—socket to rear quarter panel	PMP0412	18	6			
24	Washer—spring	LWZ204	19	6			
25	Socket—hood fastener locating	AHH6883	20	2			
26	Back-plate—hood fastener socket	AHH6882	21	2			
27	Rivet—socket and back-plate to body	DMP0824	22	8			
28	Plate—retaining—hood—rear	14B1730	23	2			
29	Washer—cup—plate	MB19956	24	2			
30	Screw fixing plate	PMZ0304	25	2			
31	Screw fixing plate	PMZ0306	26	2			
32	Bag—hood frame—stowage	AHH6754	27	1			
33	Bag—hood cover—stowage	AHH6755	28	1			

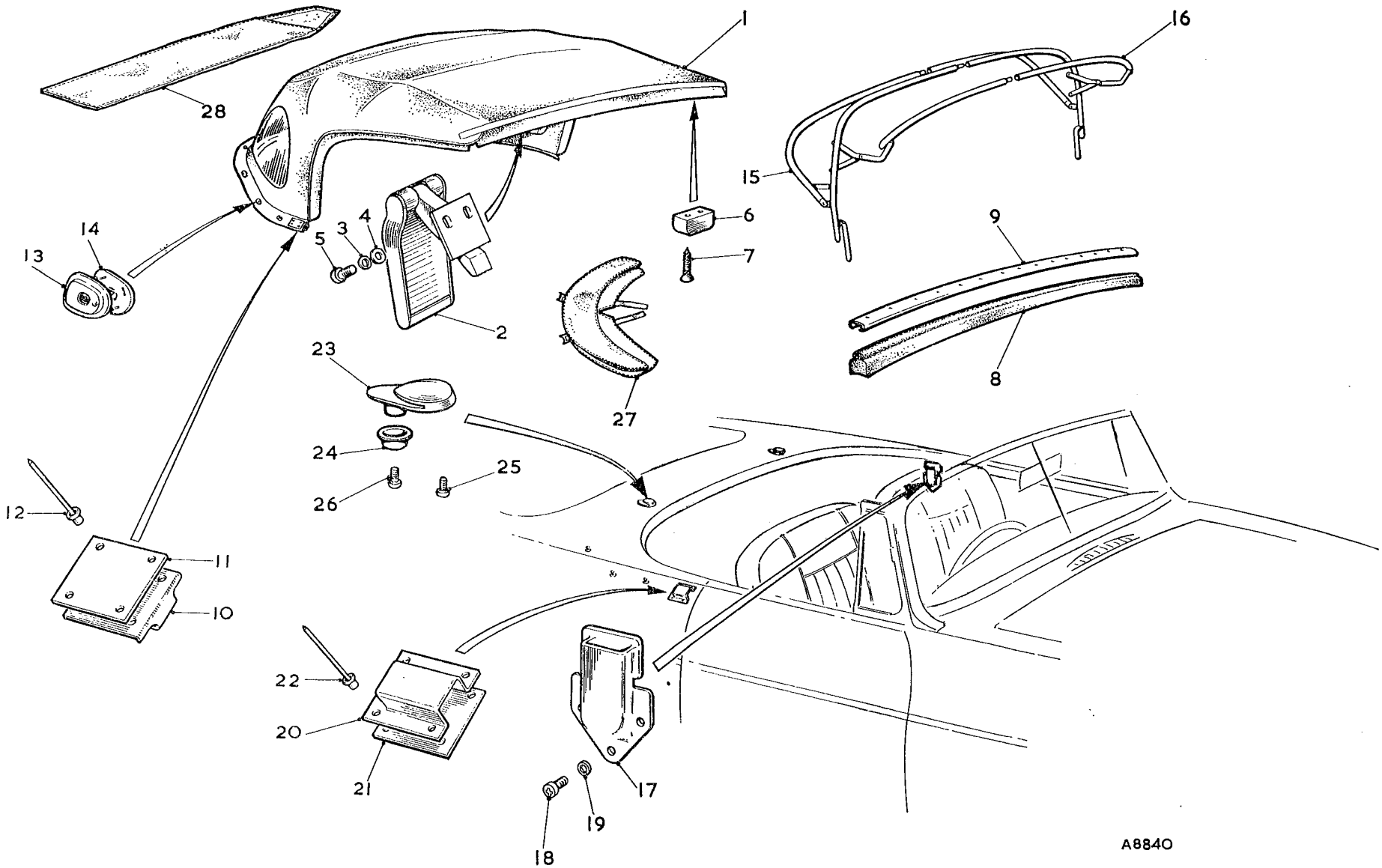

To face page R.12

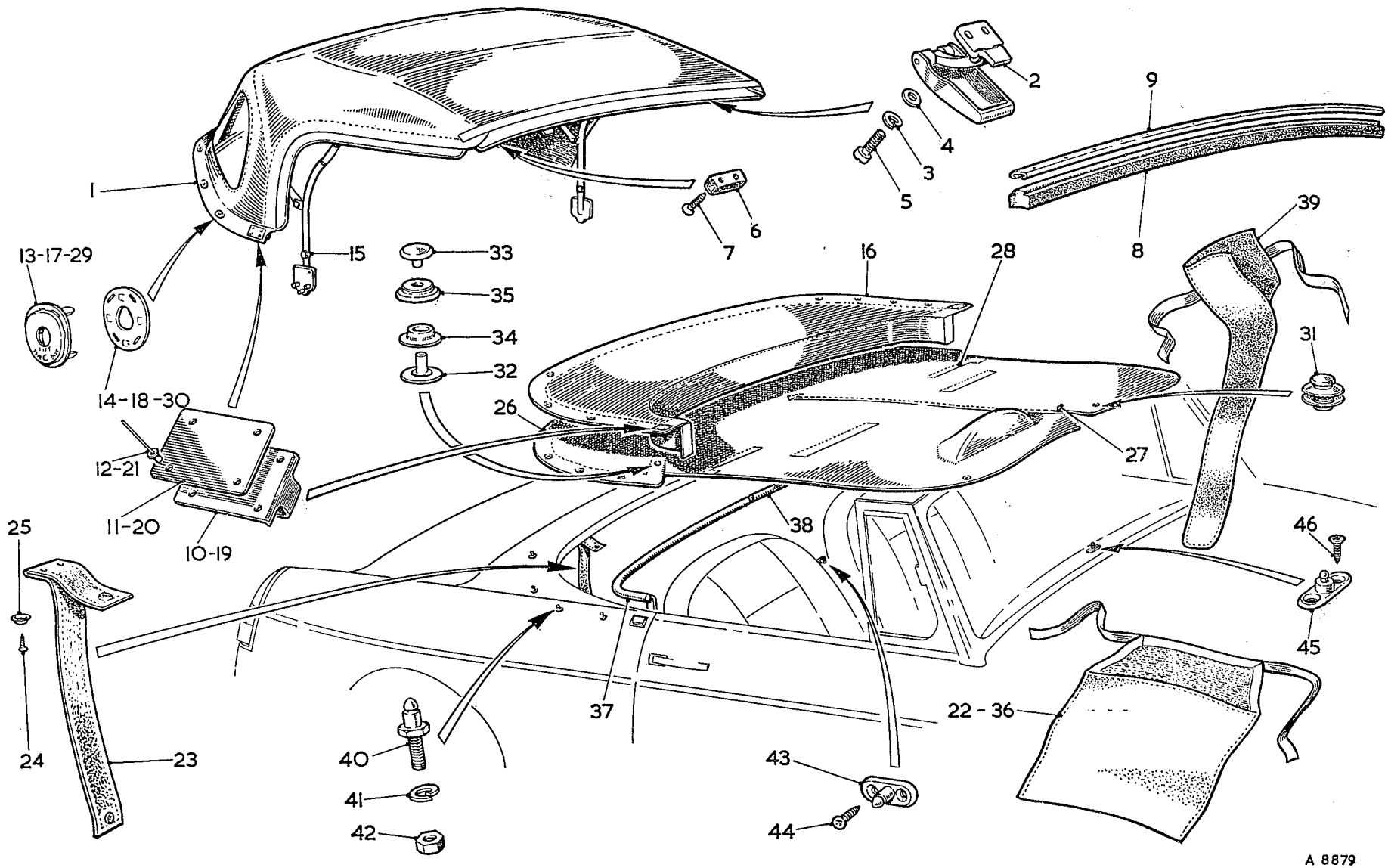

To face page R.13

Item No.	DESCRIPTION	Commencing (C) GHN8/101 Part Number	Illus. No.	Qty. per Veh.	MODIFICATIONS New Part Number	MODIFICATIONS Change Point	REMARKS
	FOLDING HOOD (Optional Extra)						
1	**Hood assembly—folding—Red**	**AHH6838**	1	1			
2	**Hood assembly—folding—Grey**	**AHH6839**		1			
3	**Hood assembly—folding—Blue**	**AHH6840**		1			
4	Cover assembly—hood—Red	AKE4607		1			
5	Cover assembly—hood—Grey	AKE4608		1			
6	Cover assembly—hood—Blue	AKE4609		1			
7	Fastener assembly—hood	AHH6262	2	2			
8	Washer—spring	LWZ203	3	4			
9	Washer—plain	PWZ203	4	4			
10	Screw—fastener	PMZ0308	5	2			
11	Pad—header rail	AHH6439	6	2			
12	Screw—pad to header rail	CTZ604	7	4			
13	Seal—header rail	AHH6438	8	1			
14	Retainer—seal	AHH6440	9	1			
15	Tongue—hood fastener	AHH6884	10	2			
16	Back-plate—hood fastener	AHH6882	11	2			
17	Rivet—tongue and back-plate to hood	DMP0829	13	8			
18	Socket—fastener	LFS107	13	8			
19	Washer—fastener socket	LFS100	14	8			
20	Frame assembly—hood	AHH6885	15	1			
21	**Cover—compartment—folding hood—Red**	**AHH6924**	16	1			
22	**Cover—compartment—folding hood—Blue**	**AHH6925**		1			
23	**Cover—compartment—folding hood—Black**	**AHH6926**		1			
24	Socket—fastener	LFS107	17	8			
25	Washer—fastener socket	LFS100	18	8			
26	Tongue—fastener	AHH6884	19	2			
27	Back-plate—tongue fastener	AHH6882	20	2			
28	Rivet—tongue and back-plate to cover	DMP0829	21	8			
29	Bag—hood cover—stowage	AHH6760	22	1			
30	Strap—securing stowed hood	AHH6881	23	2			
31	Screw—strap to boot reinforcement	RTZ804	24	4			
32	Washer—cup	FWZ208	25	4			
33	Rail assembly—support—tonneau—RH			1			See page R.14
34	Rail assembly—support—tonneau—LH			1			
35	Bag—tonneau rail—stowage			1			

Item No.	DESCRIPTION		Commencing (C) GHN3/101 Part Number	Illus. No.	Qty. per Veh.	MODIFICATIONS New Part Number	MODIFICATIONS Change Point	REMARKS
	TONNEAU COVER (Optional Extra)							
1	**Cover assembly—tonneau—Black**	RHD	**AHH6823**	26	1			
2	**Cover assembly—tonneau—Red**	RHD	**AHH6824**		1			
3	**Cover assembly—tonneau—Blue**	RHD	**AHH6825**		1			
4	**Cover assembly—tonneau—Black**	LHD	**AHH6826**		1			
5	**Cover assembly—tonneau**	LHD	**AHH6827**		1			
6	**Cover assembly—tonneau—Blue**	LHD	**AHH6828**		1			
7	Fastener—zip—42″ (106·68 cm.)—Black		AHH6911	27	1			
8	Fastener—zip—42″ (106·68 cm.)—Red		AHH6910		1			
9	Fastener—zip—42″ (106·68 cm.)—Blue		AHH6912		1			
10	Fastener—zip—12″ (30·48 cm.)—Black		AHH6914	28	2			
11	Fastener—zip—12″ (30·48 cm.)—Red		AHH6913		2			
12	Fastener—zip—12″ (30·48 cm.)—Blue		AHH6915		2			
13	Socket—fastener		LFS107	29	12			
14	Washer—fastener socket		LFS100	30	12			
15	Socket—fastener		TFS100	31	3			
16	Socket		7H9866	32	8			
17	Button		7H9864	33	8			
18	Stud		7H9867	34	8			
19	Eyelet		7H9868	35	8			
20	Bag—tonneau cover—stowage		AHH6760	36	1			
21	**Rail assembly—support—tonneau—RH**		**AHH6529**	37	1			**Also used with folding hood**
22	**Rail assembly—support—tonneau—LH**		**AHH6530**	38	1			**Also used with folding hood**
23	Bag—tonneau rail—stowage		AHH6757	39	1			
24	Peg—fastener		LFP1006	40	8			
25	Washer—spring		LWZ203	41	8			
26	Nut—peg to body		FNZ103	42	8			
27	Peg—base plate fastener—tonneau cover		LFP116	43	4			
28	Screw—peg to heelboard		RTP604	44	8			
29	Peg—base plate fastener—tonneau cover		TFP116	45	3			
30	Screw—peg to shroud panel		RTP603	46	6			

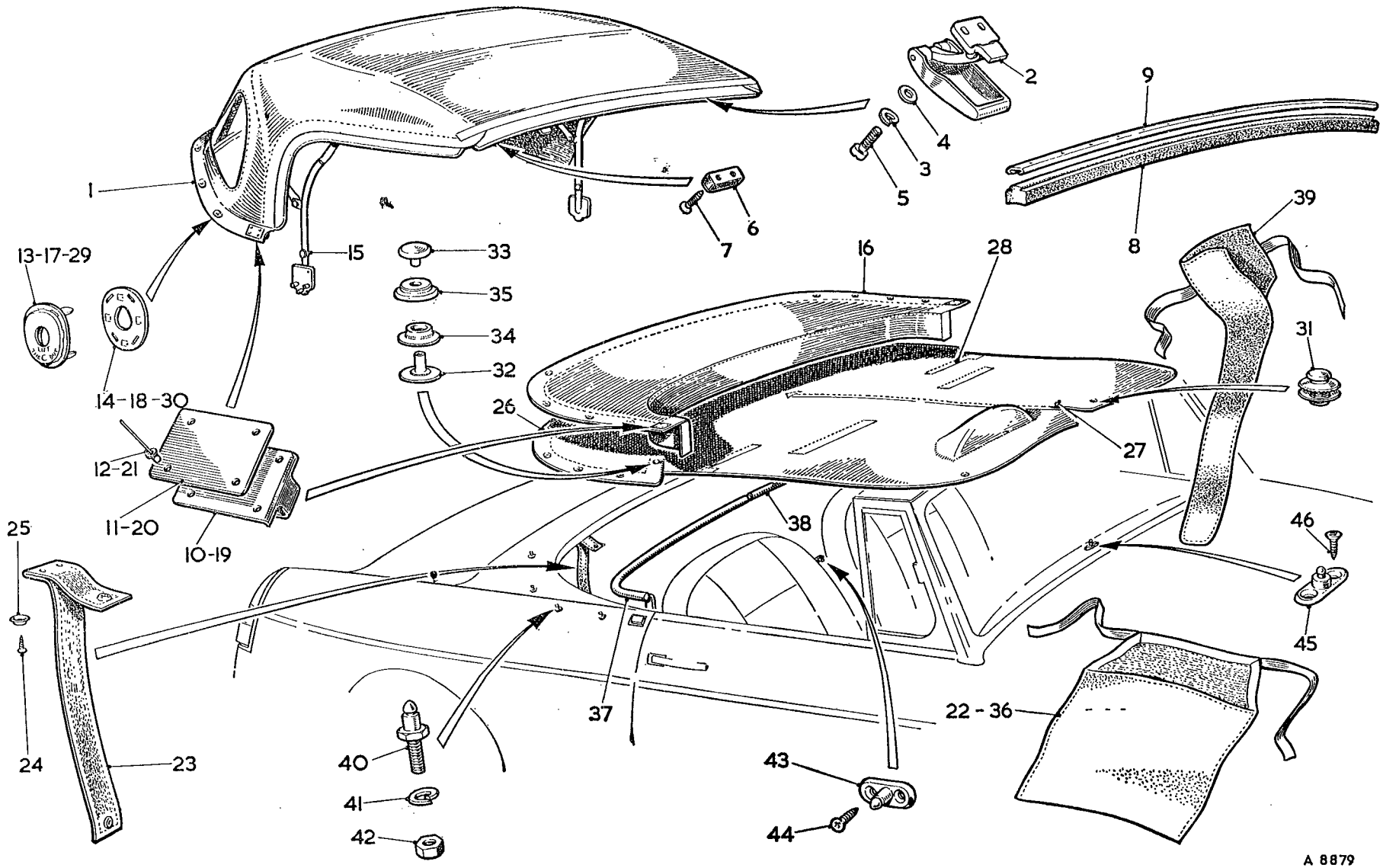

To face page R.14

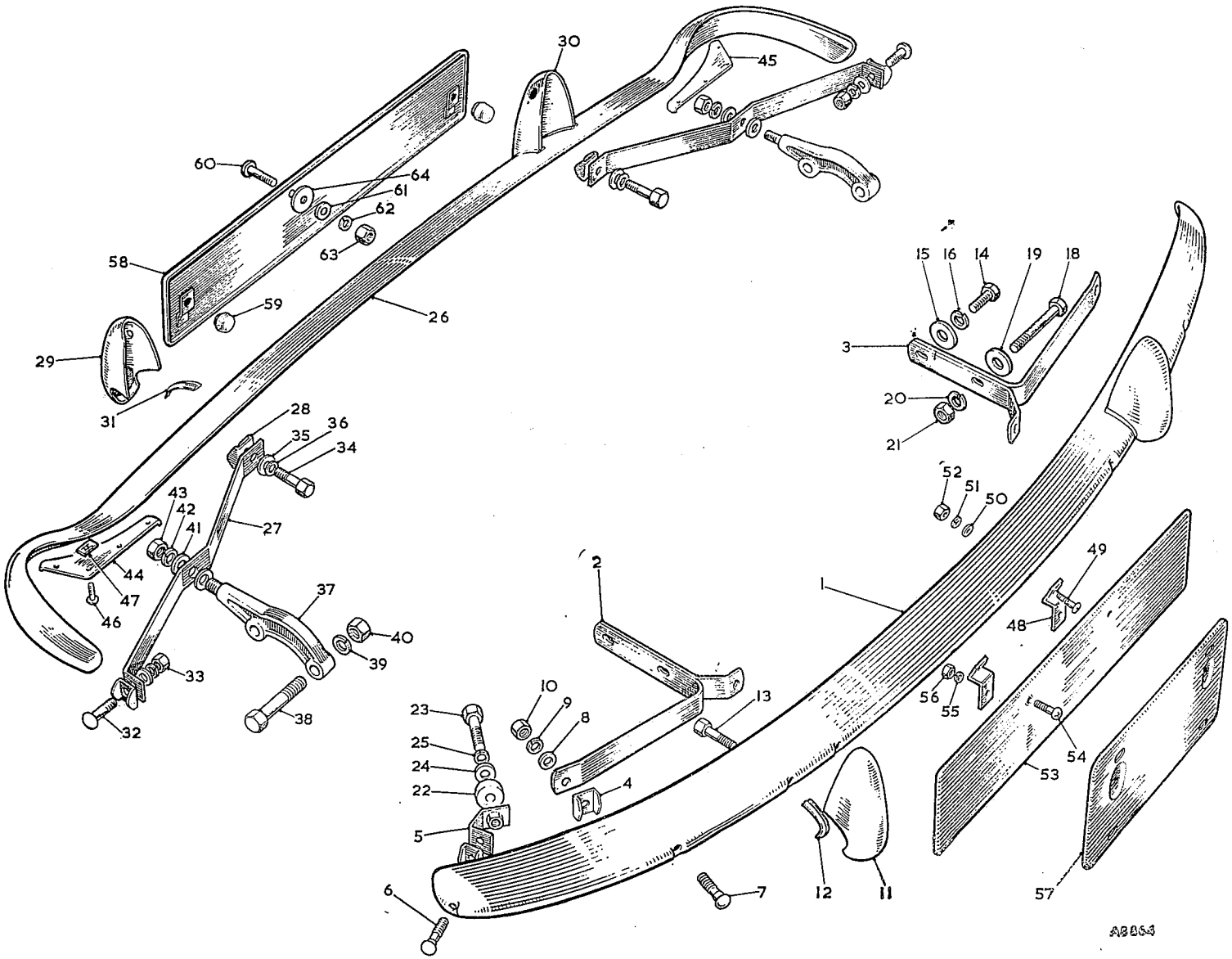

To face page R.15

Item No.	DESCRIPTION	Commencing (C) GHN3/101 Part Number	Illus. No.	Qty. per Veh.	MODIFICATIONS New Part Number	MODIFICATIONS Change Point	REMARKS
	BUMPERS AND NUMBER-PLATES						
1	**Bumper assembly—front**	**NSP**		1			
2	Bar—bumper	AHH6208	1	1			
3	Spring—bumper bar—RH	AHH6209	2	1			
4	Spring—bumper bar—LH	AHH6210	3	1			
5	Washer—distance	AHH6216	4	6			
6	Bracket—steady	AHH6215	5	2			
7	Bolt—bumper bar to steady bracket	AHH6218	6	4/2			Quantity reduced when over-rider fitted
8	Bolt—bumper bar to spring	AHH6219	7	4			
9	Washer—bolt	AJD7162	8	6			
10	Washer—spring	LWZ206	9	8			
11	Nut—bolts	FNZ106	10	8/6			Quantity reduced when over-rider fitted
12	**Over-rider assembly—front**	**AHH6916**	11	2			Optional extra
13	Moulding—over-rider—4" (10·1 cm.)	37H9781	12	A/R			Optional extra
14	Bolt—over-rider to bar	HBZ0612	13	2			Optional extra
15	Screw—bumper bar spring to body	HPZ0710	14	2			
16	Washer—screw	2K6842	15	2			
17	Washer—spring	LWZ307	16	2			
18	Nut—screw	FNZ107	17	2			
19	Bolt—bumper bar spring to body	HBZ0728	18	2			
20	Washer—bolt	2K6842	19	2			
21	Washer—spring	LWZ307	20	2			
22	Nut—bolt	FNZ107	21	2			
23	Pad—steady bracket to body (rubber)	24G629	22	2			
24	Screw—steady bracket to body	HZS0610	23	2			
25	Washer—screw	AJD7162	24	2			
26	Washer—spring—screw	LWZ206	25	2			
27	**Bumper assembly—rear**	**NSP**		1			
28	Bar—bumper	AHH6261	26	1			
29	Spring—bumper bar	AHH6250	27	2			
30	Washer—distance	AHH6216	28	4			
31	**Over-rider assembly—RH**	**AHH6489**	29	1			
32	**Over-rider assembly—LH**	**AHH6490**	30	1			
33	Moulding—over-rider—4" (10·1 cm.)	37H9781	31	A/R			
34	Bolt—bumper bar to spring	AHH6219	32	2			
35	Nut—bolt	FNZ106	33	2			
36	Bolt—over-rider and bumper bar to spring	HBZ0616	34	2			
37	Washer—bolt	AJD7162	35	4			
38	Washer—spring	LWZ206	36	4			

Item No.	DESCRIPTION	Commencing (C) GHN3/101 Part Number	Illus. No.	Qty. per Veh.	MODIFICATIONS New Part Number	MODIFICATIONS Change Point	REMARKS
	Bumpers and Number-plates—*continued*						
1	Bracket—bumper mounting	AHH6335	37	2			
2	Bolt—mounting bracket to frame	HBZ0730	38	4			
3	Washer—spring	LWZ307	39	4			
4	Nut—bolt	FNZ107	40	4			
5	Washer—plain—bumper to mounting bracket	PWZ208	41	4			
6	Washer—spring—bumper to mounting bracket	LWZ208	42	2			
7	Nut—bumper bar to mounting bracket	FNZ108	43	2			
8	Filler—bumper to body—RH	AHH6282	44	1			
9	Filler—bumper to body—LH	AHH6283	45	1			
10	Screw—filler to body	PJZ603	46	8			
11	Nut—spring—screw	PFS206	47	8			
12	Bracket—front number-plate	AHH6217	48	2			
13	Screw—bracket to bumper	PMZ0412	49	2			
14	Washer—plain	PWZ104	50	2			
15	Washer—spring	LWZ304	51	2			
16	Nut—screw	FNZ104	52	2			
17	Number-plate—front	ADG474	53	1			
18	Screw—number-plate to bracket	PMZ0410	54	2			Except North America
19	Washer—spring	LWZ204	55	2			
20	Nut—screw	FNZ104	56	2			
21	Support—front number-plate **LHD**	AHA5211	57	1			North America
22	Number-plate—rear	AHA5791	58	1			
23	Buffer—rear number-plate	AHA5804	59	2			Except North America
24	Screw—number-plate to body	PMZ0412	60	2			
25	Washer—plain	PWZ104	61	2			
26	Washer—spring	LWZ204	62	2			
27	Nut—screw	FNZ104	63	2			
28	Washer—packing—rear number-plate to body	AHH5712	64	4			

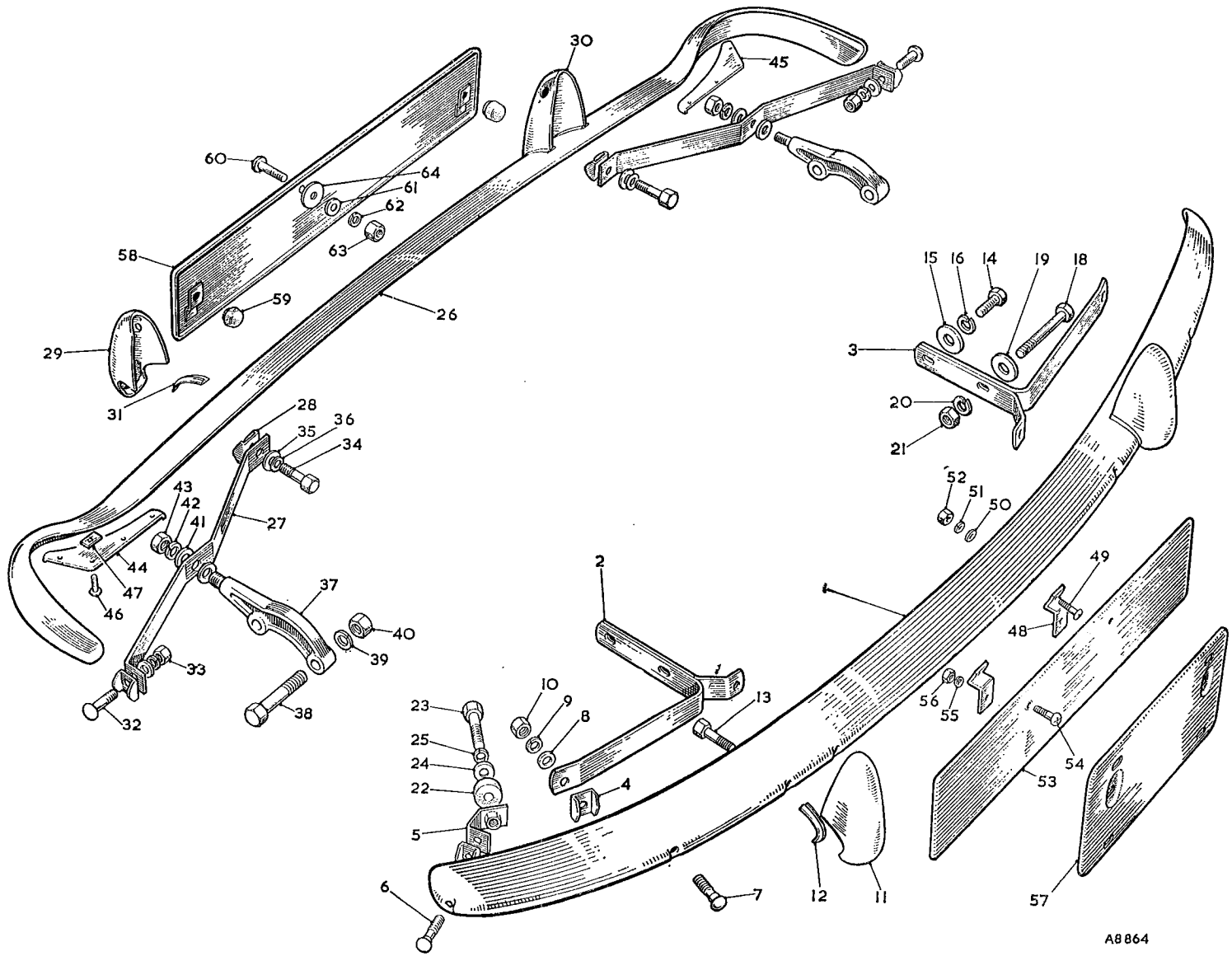

To face page R.16

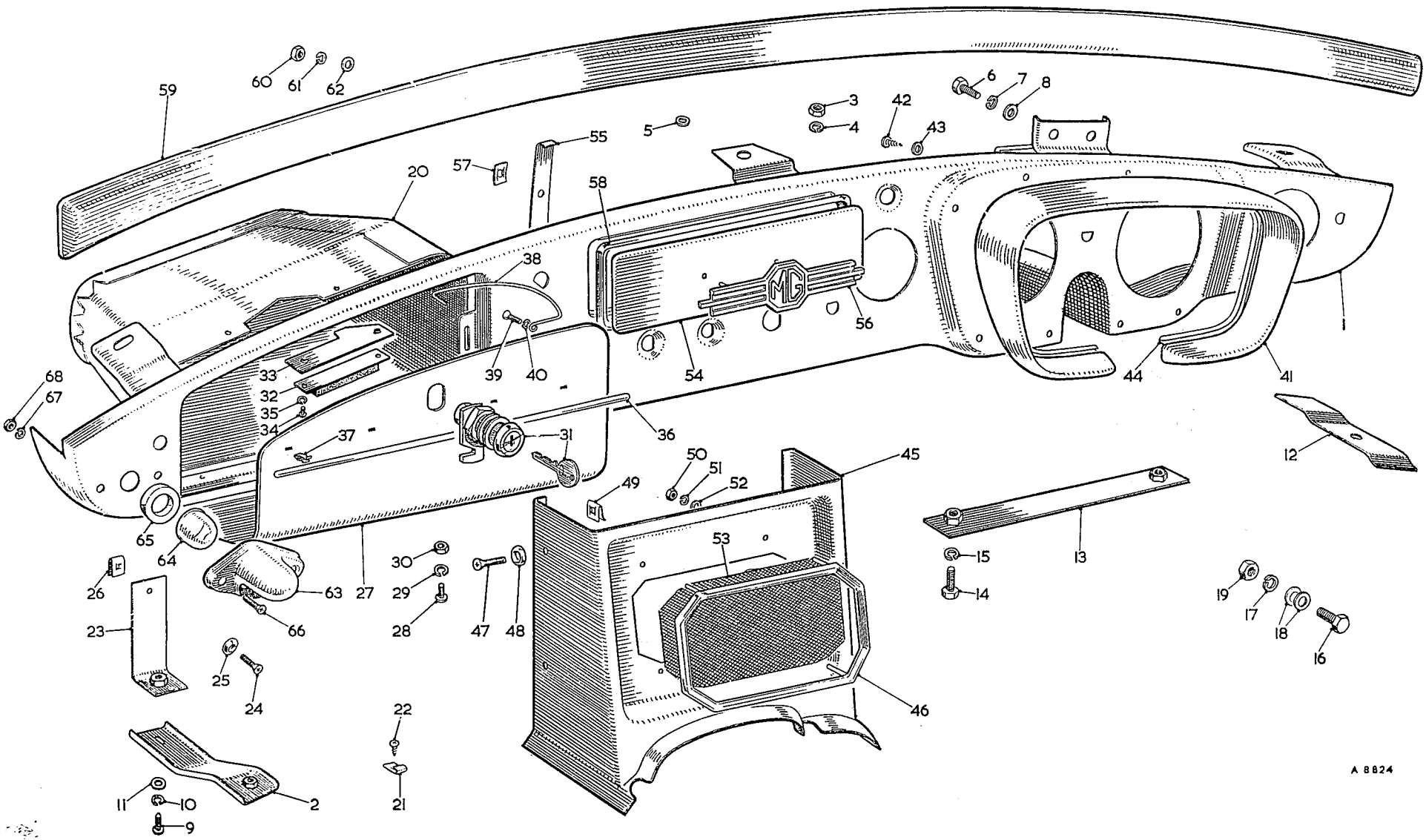

To face page R.17

Item No.	DESCRIPTION		Commencing (C) GHN3/101 Part Number	Illus. No.	Qty. per Veh.	MODIFICATIONS New Part Number	MODIFICATIONS Change Point	REMARKS
	FASCIA							
1	**Panel assembly—fascia**	**RHD**	**HZA452**	**1**	**1**			
2	**Panel assembly—fascia**	**LHD**	**HZA453**		**1**			
3	Bracket—steady	**RHD**	HZA544	**2**	1			
4	Bracket—steady	**LHD**	HZA545		1			
5	Nut—fascia to body		FNZ105	**3**	**3**			
6	Washer—spring		LWZ205	**4**	**3**			
7	Washer—plain		PWZ205	**5**	1			
8	Screw—fascia to body		HZS0406	**6**	**2**			
9	Washer—spring		LWZ204	**7**	**2**			
10	Washer—plain		PWZ104	**8**	**2**			
11	Screw—steady bracket to fascia panel and attachment bracket		PMZ0308	**9**	**2**			
12	Washer—spring		LWZ203	**10**	**2**			
13	Washer—plain—attachment bracket to steady bracket		PWZ103	**11**	1			
14	Plate—washer—fascia fixing		AHH6293	**12**	**2**			
15	Plate assembly—fascia fixing		AHH6713	**13**	1			
16	Screw—fascia to centre reinforcement		HZS0404	**14**	**2**			
17	Washer—spring		LWZ204	**15**	**2**			
18	Screw—steering-column support bracket to cross-tube		HZS0506	**16**	**2**			
19	Washer—spring		LWZ205	**17**	**2**			
20	Washer—plain		PWZ105	**18**	**4**			
21	Nut—screw		FNZ105	**19**	**2**			
22	**Box—glove**	**RHD**	**AHH6338**	**20**	**1**			
23	**Box—glove**	**LHD**	**AHH6339**		**1**			
24	Nut—spring		PFS326	**21**	**7**			
25	Screw—glovebox to fascia		PTZ602	**22**	**7**			
26	Bracket—attachment—glovebox	**RHD**	HZA543	**23**	**1**			
27	Bracket—attachment—glovebox	**LHD**	HZA542		**1**			
28	Screw—attachment bracket to glovebox		RTP2804	**24**	**1**			
29	Washer—cup		FWP708	**25**	**1**			
30	Nut—spring		PFS308	**26**	**1**			
31	**Lid assembly—glovebox**	**RHD**	**HZA454**	**27**	**1**			
32	**Lid assembly—glovebox**	**LHD**	**HZA455**		**1**			
33	Screw—glovebox lid to fascia		PMZ0305	**28**	**3**			
34	Washer—spring		LWZ203	**29**	**3**			
35	Nut—screw		FNZ103	**30**	**3**			

Item No.	DESCRIPTION	Commencing (C) GHN8/101 Part Number	Illus. No.	Qty. per Veh.	MODIFICATIONS New Part Number	MODIFICATIONS Change Point	REMARKS
	Fascia—*continued*						
1	**Lock assembly—glovebox lid**	**AHH6331**	31	1			
2	Key	ANK4646		2			Always quote key number
3	Buffer—glovebox lid	AHH6292	32	1			
4	Catch—glovebox lock	AHH6291	33	1			
5	Screw—catch and buffer to glovebox	PMZ0204	34	2			
6	Washer—spring	LWZ202	35	2			
7	Finisher—glovebox lid	BDH741	36	1			
8	Clip—finisher to glovebox	14B934	37	4			
9	Arm—check—glovebox **RHD**	AHH6329	38	1			
10	Arm—check—glovebox **LHD**	AHH6330		1			
11	Screw—check arm to glovebox lid	PMZ0206	39	1			
12	Washer—spring	LWZ202	40	1			
13	Hood—instrument	AHH6142	41	1			
14	Screw—hood to fascia panel	AHH6164	42	8			
15	Washer—plain	PWZ102	43	8			
16	Finisher—instrument hood	AHH6182	44	1			
17	Panel—radio speaker	AHH6169	45	1			
18	Bezel—radio speaker panel	AHH6742	46	1			
19	Screw—speaker panel fixing	RJP805	47	4			
20	Washer—cup	FWP208	48	4			
21	Nut—spring	PFS308	49	4			
22	Nut—bezel to speaker panel	CNZ102	50	4			
23	Washer—spring	LWZ202	51	4			
24	Washer—plain	PWZ202	52	4			
25	Grille—radio speaker	AHH6753	53	1			
26	Plate—blanking—radio aperture	ARH59	54	1			
27	Clip—blanking plate to fascia panel	AHH5256	55	2			
28	Motif 'MG'	AHH5258	56	1			
29	Nut—clip (Spire)	ADB509	57	2			
30	Bezel—radio aperture	AHH5255	58	1			
31	**Roll assembly—crash—Black with Black piping**	**AKE4517**	59	1			
32	Roll assembly—crash—Black with Red piping	AKE4518		1			
33	Roll assembly—crash—Black with White piping	AKE4519		1			
34	Roll assembly—crash—Black with Pale Blue piping	AKE4520		1			
35	Nut—crash roll fixing	FNZ103	60	8			
36	Washer—spring	LWZ203	61	8			
37	Washer—plain	PWZ103	62	8			
38	Cover—map light	37H5426	63	1			
39	Glass—map light	17H5301	64	1			
40	Gasket—seating	17H5302	65	1			
41	Screw—map light to fascia panel	RMP0310	66	2			
42	Washer—spring	LWZ203	67	2			
43	Nut—screw	FNZ103	68	2			

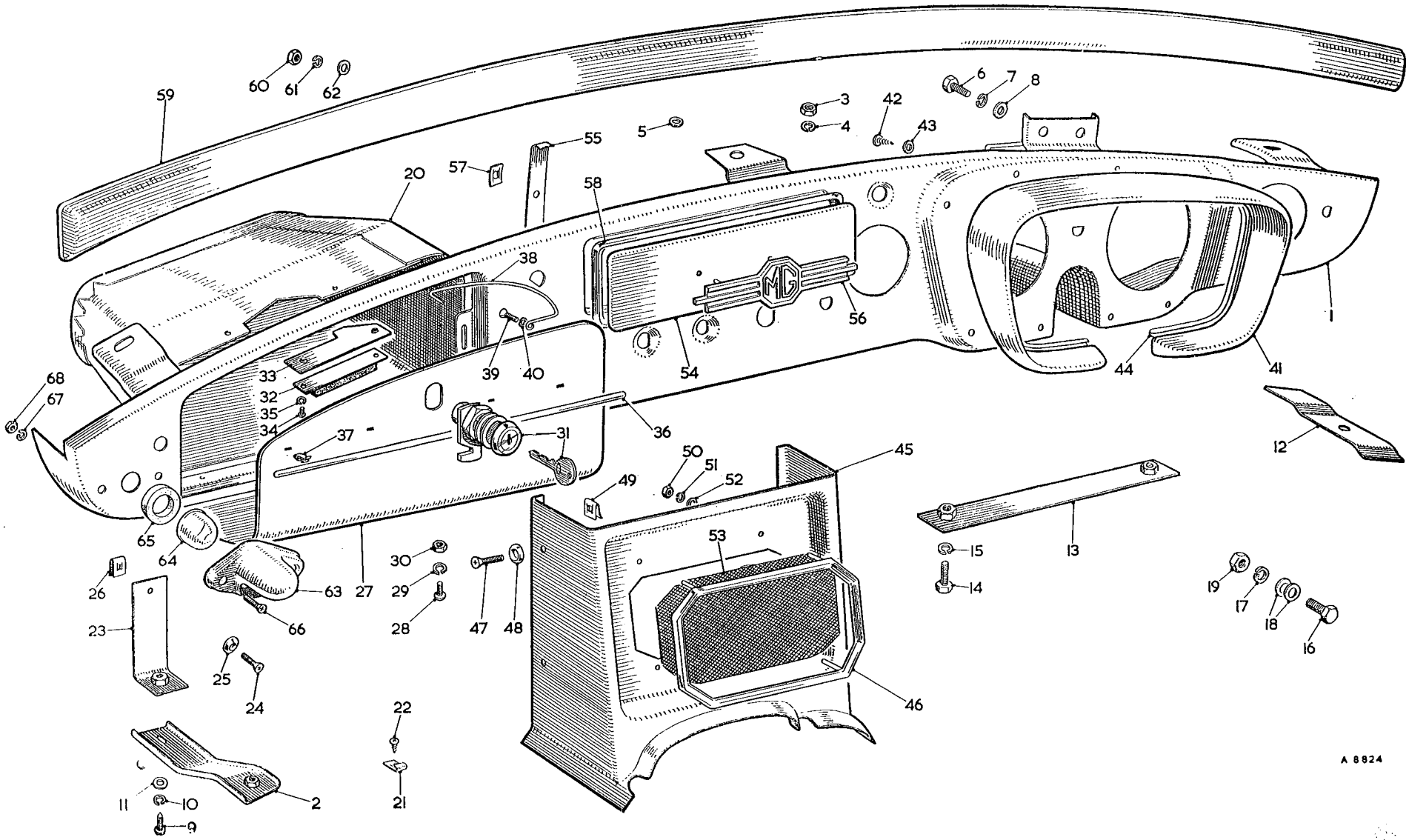

To face page R.18

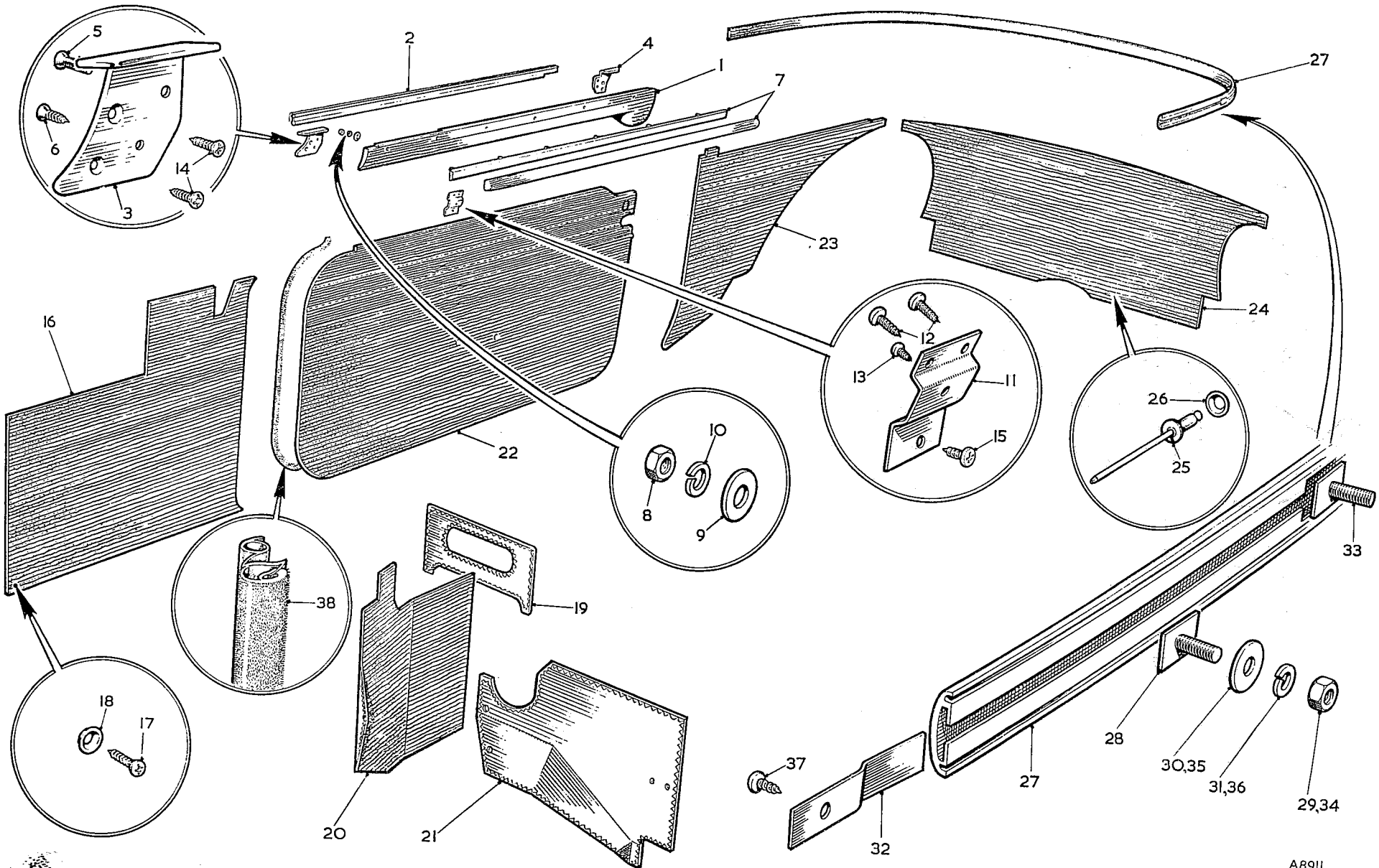

To face page R.19

Item No.	DESCRIPTION	Commencing (C) GHN3/101 Part Number	Illus. No.	Qty. per Veh.	MODIFICATIONS New Part Number	MODIFICATIONS Change Point	REMARKS
	TRIM						
1	**Capping assembly—waist rail—RH—Black**	**AKE4569**	1	1			
2	Capping assembly—waist rail—LH—Black	AKE4570		1			
3	Weatherstrip—inner door—RH	AHH6508	2	1			
4	Weatherstrip—inner door—LH	AHH6509		1			
5	Finisher—waist rail—front—RH	AHH6422	3	1			
6	Finisher—waist rail—front—LH	AHH6423		1			
7	Finisher—waist rail—rear—RH	AHH6424	4	1			
8	Finisher—waist rail—rear—LH	AHH6425		1			
9	Screw—finisher to waist rail	CMZ0310	5	4			
10	Screw—finisher to waist rail	CTZ804	6	4			
11	**Trim roll assembly—waist rail door—RH—Black with Black piping**	**AKE4479**	7	1			
12	Trim roll assembly—waist rail door—RH—Black with Red piping	AKE4480		1			
13	Trim roll assembly—waist rail door—RH—Black with White piping	AKE4481		1			
14	Trim roll assembly—waist rail door—RH—Black with Pale Blue piping	AKE4482		1			
15	**Trim roll assembly—waist rail door—LH—Black with Black piping**	**AKE4483**		1			
16	Trim roll assembly—waist rail door—LH—Black with Red piping	AKE4484		1			
17	Trim roll assembly—waist rail door—LH—Black with White piping	AKE4485		1			
18	Trim roll assembly—waist rail door—LH—Black with Pale Blue piping	AKE4486		1			
19	Nut—trim roll to capping	FNZ103	8	12			
20	Washer—plain	PWZ203	9	12			
21	Washer—spring	LWZ203	10	12			
22	Tab—finisher—waist rail	HZA230	11	2			
23	Screw—tab to waist rail	PTZ805	12	4			
24	Screw—tab to waist rail	PTZ602	13	2			
25	Screw—waist rail to door	RTP804	14	8			
26	Screw—waist rail to door	PTZ803	15	2			

Item No.	DESCRIPTION	Commencing (C) GHN3/101 Part Number	Illus. No.	Qty. per Veh.	MODIFICATIONS New Part Number	MODIFICATIONS Change Point	REMARKS
	Trim—*continued*						
1	**Liner assembly—scuttle side—RH—Black**	**AKE4521**	16	1			
2	Liner assembly—scuttle side—RH—Red	AKE4522		1			
3	Liner assembly—scuttle side—RH—Blue	AKE4523		1			
4	**Liner assembly—scuttle side—LH—Black**	**AKE4524**		1			
5	Liner assembly—scuttle side—LH—Red	AKE4525		1			
6	Liner assembly—scuttle side—LH—Blue	AKE4526		1			
7	Screw—liner assembly	RTP605	17	14			
8	Washer—cup	6K9062	18	14			
9	**Trim pad assembly—air intake box—centre—Black**	**AKE4533**	19	1			
10	Trim pad assembly—air intake box—centre—Red	AKE4534		1			
11	Trim pad assembly—air intake box—centre—Blue	AKE4535		1			
12	**Trim pad assembly—air intake box—RH side—Black**	**AKE4536**		1			
13	Trim pad assembly—air intake box—RH side—Red	AKE4537		1			
14	Trim pad assembly—air intake box—RH side—Blue	AKE4538		1			
15	**Trim pad assembly—air intake box—LH side—Black**	**AKE4539**	20	1			
16	Trim pad assembly—air intake box—LH side—Red	AKE4540		1			
17	Trim pad assembly—air intake box—LH side—Blue	AKE4541		1			
18	Screw—trim pad assembly	RTP605		10			
19	Washer—cup	6K9062		10			
20	**Trim pad assembly—toeboard—RH—Black**	**AKE4527**		1			
21	Trim pad assembly—toeboard—RH—Red	AKE4528		1			
22	Trim pad assembly—toeboard—RH—Blue	AKE4529		1			
23	**Trim pad assembly—toeboard—LH—Black**	**AKE4530**	21	1			
24	Trim pad assembly—toeboard—LH—Red	AKE4531		1			
25	Trim pad assembly—toeboard—LH—Blue	AKE4532		1			
26	**Liner assembly—door—RH—Black with Red piping**	**AKE4542**	22	1			
27	Liner assembly—door—RH—Black with White piping	AKE4543		1			
28	Liner assembly—door—RH—Black with Pale Blue piping	AKE4544		1			
29	Liner assembly—door—RH—Red with Black piping	AKE4545		1			
30	Liner assembly—door—RH—Red with White piping	AKE4546		1			
31	Liner assembly—door—RH—Blue with Pale Blue piping	AKE4547		1			
32	**Liner assembly—door—LH—Black with Red piping**	**AKE4548**		1			
33	Liner assembly—door—LH—Black with White piping	AKE4549		1			
34	Liner assembly—door—LH—Black with Pale Blue piping	AKE4550		1			
35	Liner assembly—door—LH—Red with Black piping	AKE4551		1			
36	Liner assembly—door—LH—Red with White piping	AKE4552		1			
37	Liner assembly—door—LH—Blue with Pale Blue piping	AKE4553		1			
38	Screw—liner assembly to door	RTP605		26			
39	Washer—cup	6K9062		26			

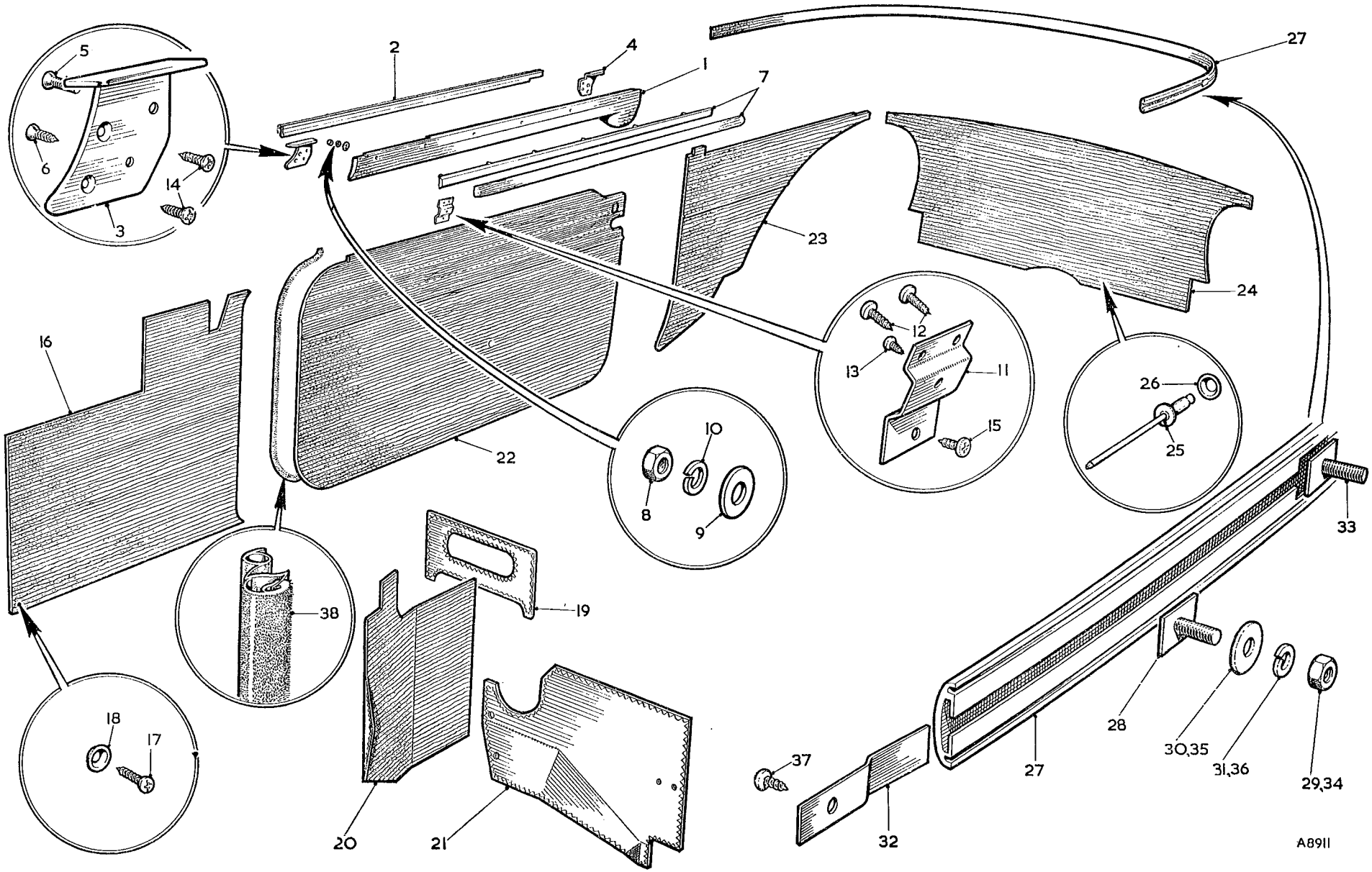

To face page R.20

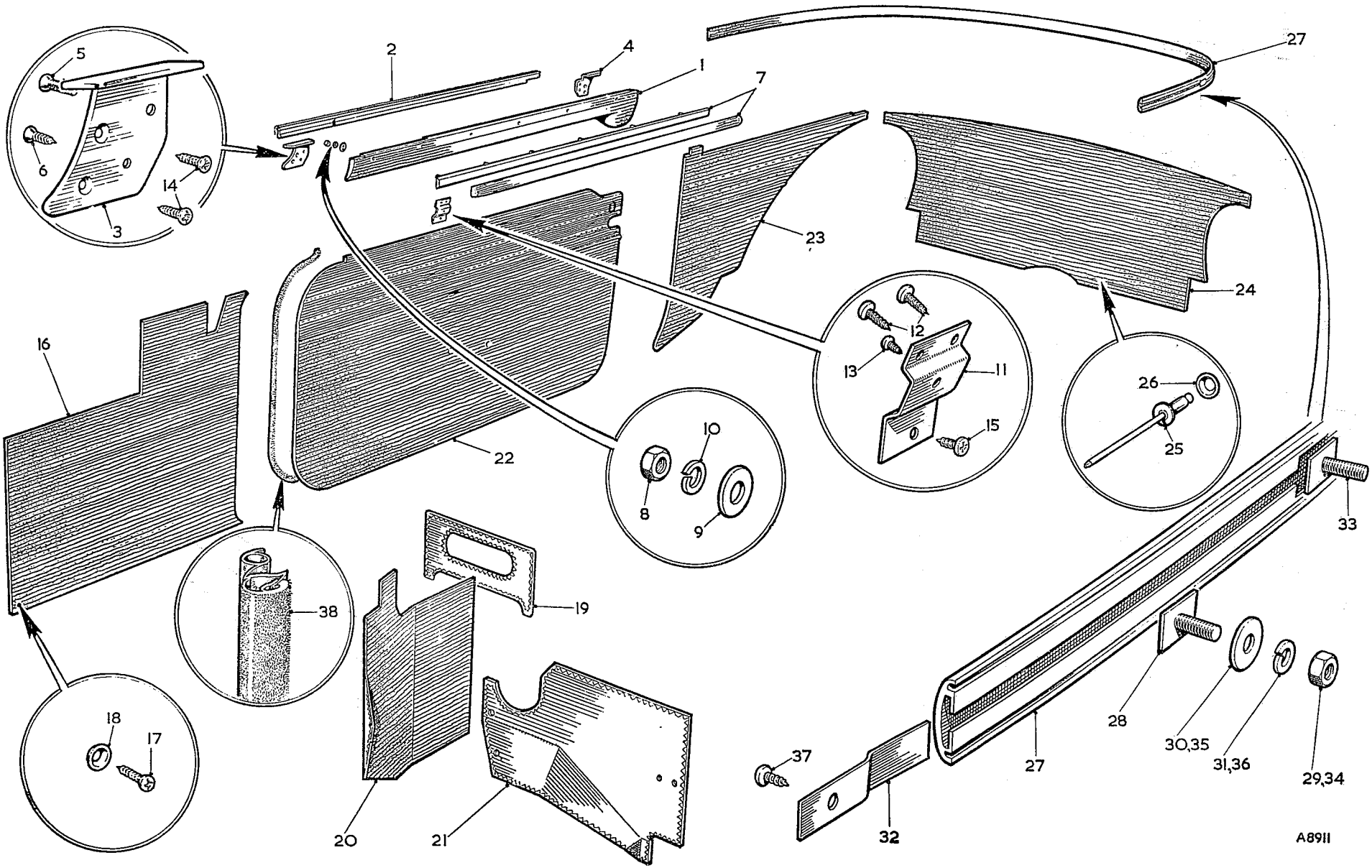

To face page R.21

Item No.	DESCRIPTION	Commencing (C) GHN3/101 Part Number	Illus. No.	Qty. per Veh.	MODIFICATIONS New Part Number	MODIFICATIONS Change Point	REMARKS
	Trim—*continued*						
1	**Liner assembly—rear quarter—RH—Black with Red piping**	**AKE4554**	**23**	**1**			
2	Liner assembly—rear quarter—RH—Black with White piping	AKE4555		1			
3	Liner assembly—rear quarter—RH—Black with Pale Blue piping	AKE4556		1			
4	Liner assembly—rear quarter—RH—Red with Black piping	AKE4557		1			
5	Liner assembly—rear quarter—RH—Red with White piping	AKE4558		1			
6	Liner assembly—rear quarter—RH—Blue with Pale Blue piping	AKE4559		1			
7	**Liner assembly—rear quarter—LH—Black with Red piping**	**AKE4560**		**1**			
8	Liner assembly—rear quarter—LH—Black with White piping	AKE4561		1			
9	Liner assembly—rear quarter—LH—Black with Pale Blue piping	AKE4562		1			
10	Liner assembly—rear quarter—LH—Red with Black piping	AKE4563		1			
11	Liner assembly—rear quarter—LH—Red with White piping	AKE4564		1			
12	Liner assembly—rear quarter—LH—Blue with Pale Blue piping	AKE4565		1			
13	Screw—liner assembly	RTP605		10			
14	Washer—cup	6K9062		10			
15	**Liner assembly—rear bulkhead—Black**	**AKE4566**	**24**	**1**			
16	Liner assembly—rear bulkhead—Red	AKE4567		1			
17	Liner assembly—rear bulkhead—Blue	AKE4568		1			
18	Rivet—liner assembly	DMP0829	**25**	8			
19	Washer—cup	6K9062	**26**	8			

Item No.	DESCRIPTION	Commencing (C) GHN3/101 Part Number	Illus. No.	Qty. per Veh.	MODIFICATIONS New Part Number	MODIFICATIONS Change Point	REMARKS
	Trim—*continued*						
1	Moulding—cockpit—rear	AHH6416	27	1			
2	Plate—stud—moulding	AHH6360	28	7			
3	Nut—stud plate	FNZ103	29	7			
4	Washer—plain	PWZ203	30	7			
5	Washer—spring	LWZ203	31	7			
6	Plate—end—cockpit moulding—rear	AHH6418	32	2			
7	Plate—stud—end plate	AHH6417	33	2			
8	Nut—stud plate	FNZ103	34	2			
9	Washer—plain	PWZ203	35	2			
10	Washer—spring	LWZ203	36	2			
11	Screw—end plate to body	PTZ803	37	2			
12	**Seal—door—Red 72″ (182·8 cm.)**	**37H9956**	38	**A/R**			
13	Seal—door—Black 72″ (182·8 cm.)	37H9955		A/R			Available in multiples of feet/yards
14	Seal—door—Blue 72″ (182·8 cm.)	37H9957		A/R			
15	Leathercloth 50″ (127 cm.) wide—Red	AHA5937		A/R			
16	Leathercloth 50″ (127 cm.) wide—Black	AHA5938		A/R			
17	Leathercloth 50″ (127 cm.) wide—Blue	AHA5939		A/R			
18	Piping—cockpit moulding—Red	AFH1837		A/R			
19	Piping—cockpit moulding—Black	AHA5940		A/R			
20	Piping—cockpit moulding—White	AFH1840		A/R			
21	Piping—cockpit moulding—Pale Blue	AFH6665		A/R			
22	Piping—fascia crash roll—Red	AFH4835		A/R			
23	Piping—fascia crash roll—Black	AFH4839		A/R			
24	Piping—fascia crash roll—White	AFH4838		A/R			
25	Piping—fascia crash roll—Pale Blue	AFH6667		A/R			

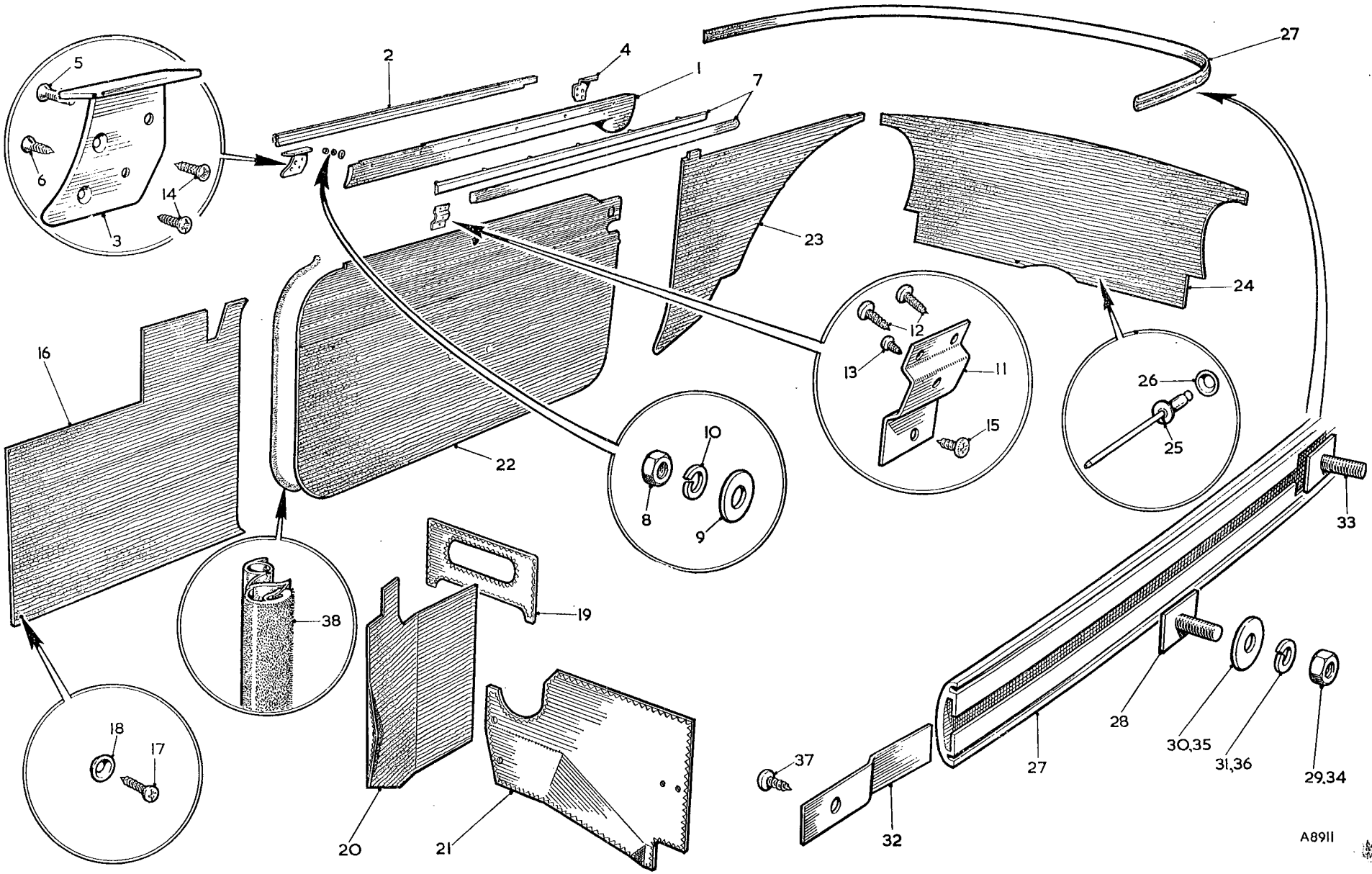

To face page R.22

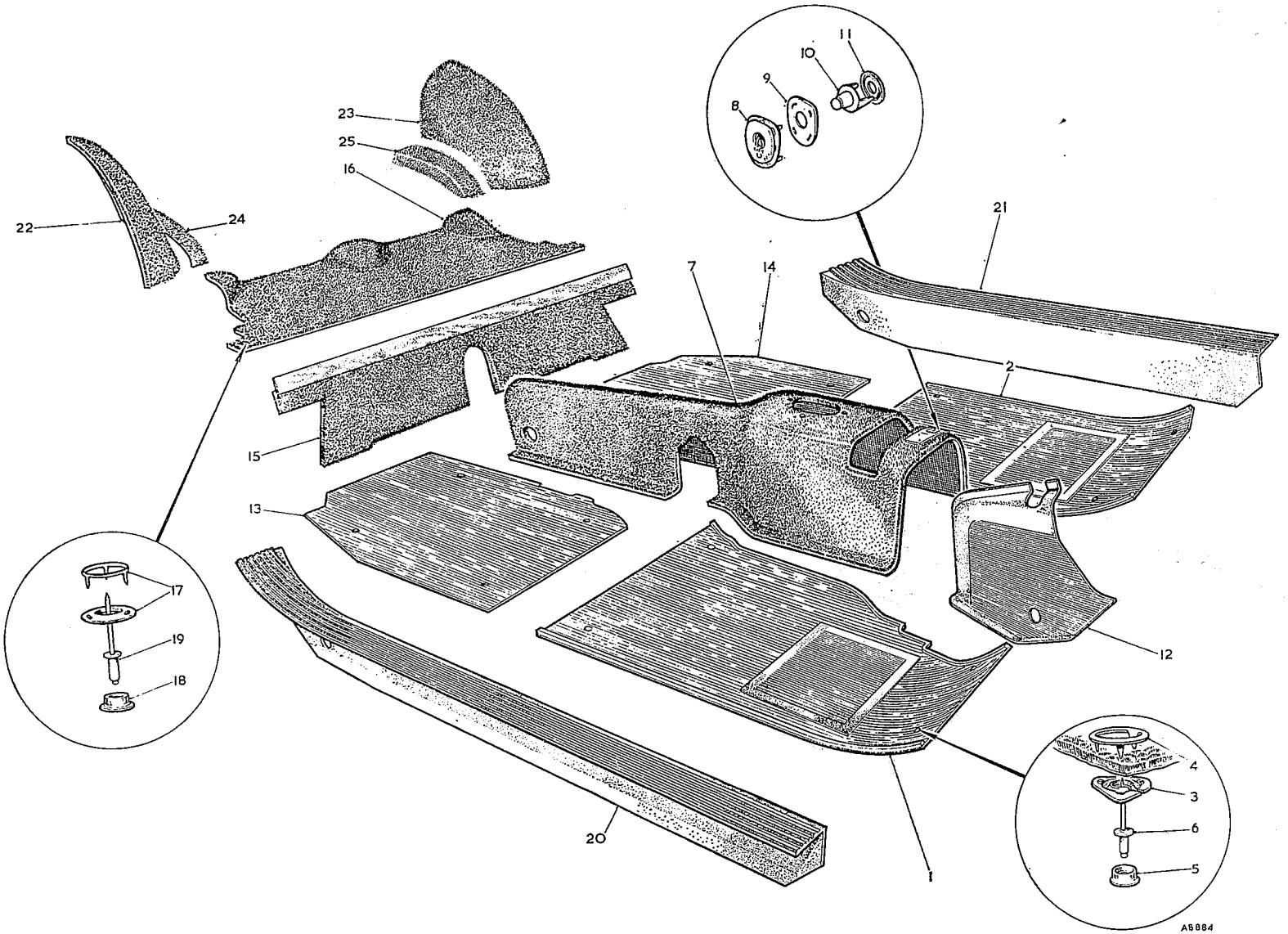

To face page R.23

Item No.	DESCRIPTION	Commencing (C) GHN3/101 Part Number	Illus. No.	Qty. per Veh.	MODIFICATIONS New Part Number	MODIFICATIONS Change Point	REMARKS
	Trim—*continued*						
1	**Mat—front—RH—Red**	**AHH6888**	1	1			
2	Mat—front—RH—Black	AHH6886		1			
3	Mat—front—RH—Blue	AHH6890		1			
4	**Mat—front—LH—Red**	**AHH6889**	2	1			
5	Mat—front—LH—Black	AHH6887		1			
6	Mat—front—LH—Blue	AHH6891		1			
7	Socket—fastener	2H8445	3	8			
8	Ring—spiked	14G8736	4	8			
9	Fastener—dot	ADB4811	5	8			
10	Rivet—pop	DMP0835	6	8			
11	**Carpet—gearbox and tunnel—Red**	**AHH6905**	7	1			
12	Carpet—gearbox and tunnel—Black	AHH6904		1			
13	Carpet—gearbox and tunnel—Blue	AHH6906		1			
14	Socket—fastener	LFS107	8	1			
15	Washer—fastener socket	LFS100	9	1			
16	Stud—fastener	BHA4355	10	1			
17	Washer—fastener	LFP1500	11	1			
18	Moulding—foot-rest—starter motor cover	AHH6443	12	1			
19	**Mat—rear—RH—Red**	**AHH6894**	13	1			
20	Mat—rear—RH—Black	AHH6892		1			
21	Mat—rear—RH—Blue	AHH6896		1			
22	**Mat—rear—LH—Red**	**AHH6895**	14	1			
23	Mat—rear—LH—Black	AHH6893		1			
24	Mat—rear—LH—Blue	AHH6897		1			
25	**Carpet—heelboard—Black**	**AHH6921**	15	1			
26	Carpet—heelboard—Red	AHH6922		1			
27	Carpet—heelboard—Blue	AHH6923		1			
28	**Carpet—rear compartment—Black**	**AHH6907**	16	1			
29	Carpet—rear compartment—Red	AHH6908		1			
30	Carpet—rear compartment—Blue	AHH6909		1			
31	Fastener assembly—carpet	ADA2889	17	6			
32	Fastener—dot	ADB4811	18	6			
33	Rivet—pop	DMP0835	19	6			
34	**Mat—sill—RH—Red**	**AHH6900**	20	1			
35	Mat—sill—RH—Black	AHH6898		1			
36	Mat—sill—RH—Blue	AHH6902		1			
37	**Mat—sill—LH—Red**	**AHH6901**	21	1			
38	Mat—sill—LH—Black	AHH6899		1			
39	Mat—sill—LH—Blue	AHH6903		1			

Item No.	DESCRIPTION	Commencing (C) GHN3/101		Qty. per Veh.	MODIFICATIONS		REMARKS
		Part Number	Illus. No.		New Part Number	Change Point	
	Trim—*continued*						
1	**Carpet—rear wheel arch—RH—20¾″ × 12″ (52·7 × 30·48 cm.)—Black**		**22**	**A/R**			Use bulk supply—available in multiples of feet/yards
2	Carpet—rear wheel arch—RH—20¾″ × 12″ (52·7 × 30·48 cm.)—Red			A/R			
3	Carpet—rear wheel arch—RH—20¾″ × 12″ (52·7 × 30·48 cm.)—Blue			A/R			
4	**Carpet—rear wheel arch—LH—20¾″ × 12″ (52·7 × 30·48 cm.)—Black**		**23**	**A/R**			
5	Carpet—rear wheel arch—LH—20¾″ × 12″ (52·7 × 30·48 cm.)—Red			A/R			
6	Carpet—rear wheel arch—LH—20¾″ × 12″ (52·7 × 30·48 cm.)—Blue			A/R			
7	**Carpet—rear compartment end—RH—12¼″ × 5″ (31·11 × 12·7 cm.)—Black**		**24**	**A/R**			
8	Carpet—rear compartment end—RH—12¼″ × 5″ (31·11 × 12·7 cm.)—Red			A/R			
9	Carpet—rear compartment end—RH—12¼″ × 5″ (31·11 × 12·7 cm.)—Blue			A/R			
10	**Carpet—rear compartment end—LH—12¼″ × 5″ (31·11 × 12·7 cm.)—Black**		**25**	**A/R**			
11	Carpet—rear compartment end—LH—12¼″ × 5″ (31·11 × 12·7 cm.)—Red			A/R			
12	Carpet—rear compartment end—LH—12¼″ × 5″ (31·11 × 12·7 cm.)—Blue			A/R			
13	Carpet material 40″ (101·6 cm.) wide—Red	AHH6842		A/R			
14	Carpet material 40″ (101·6 cm.) wide—Black	AHH6843		A/R			
15	Carpet material 40″ (101·6 cm.) wide—Blue	AHH6844		A/R			

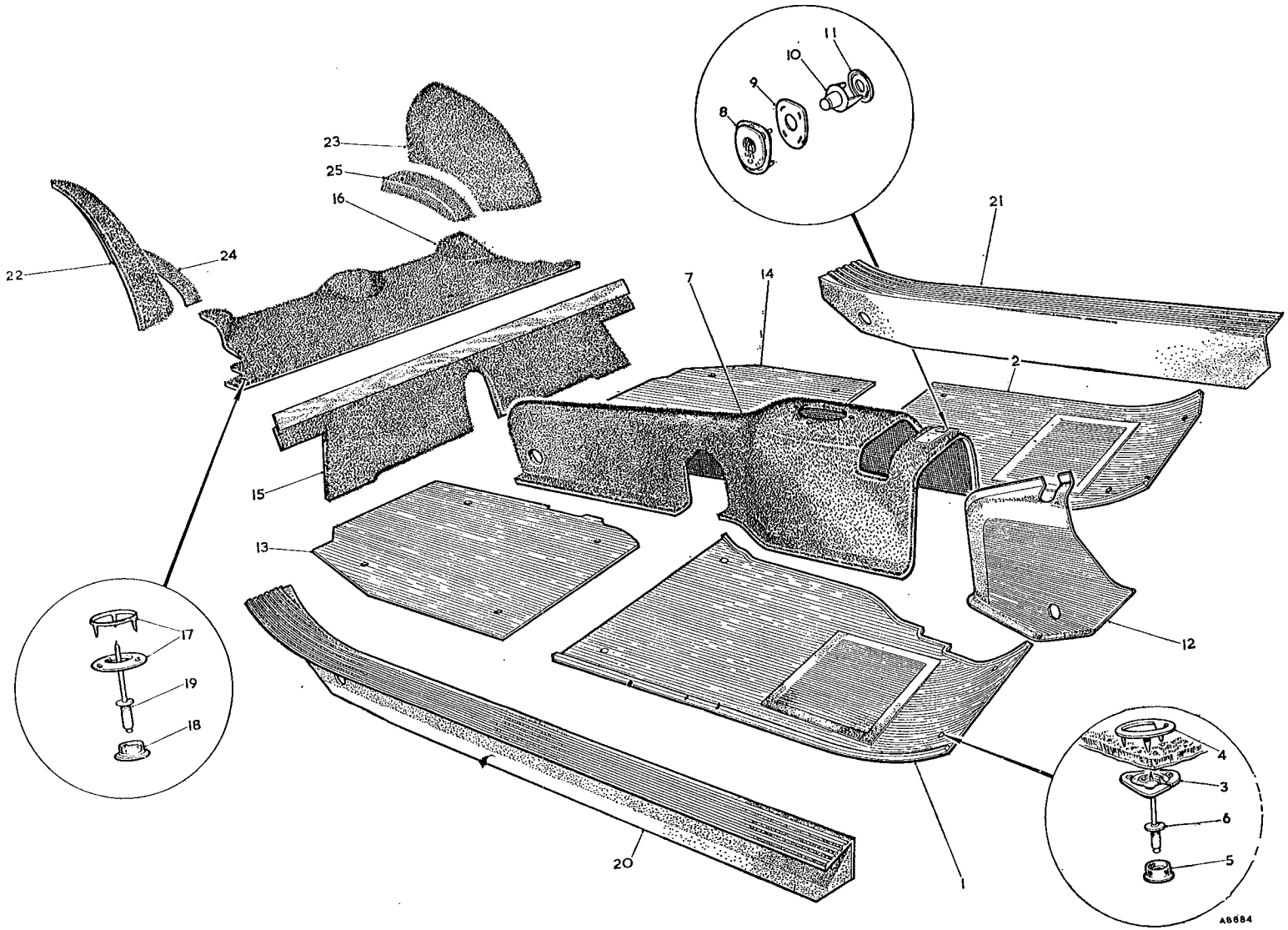

To face page R.24

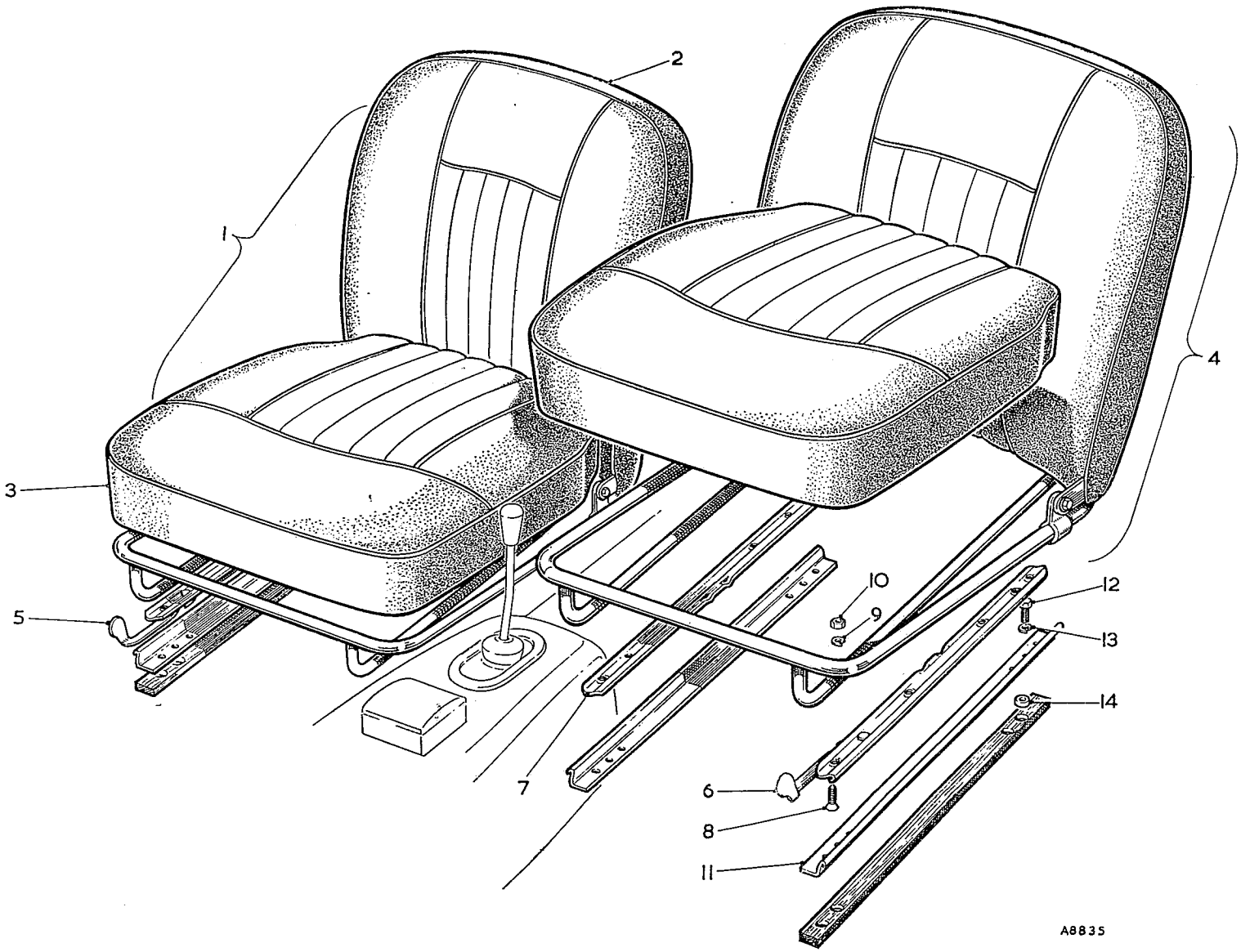

To face page R.25

Item No.	DESCRIPTION	Commencing (C) GHN3/101 Part Number	Illus. No.	Qty. per Veh.	MODIFICATIONS New Part Number	MODIFICATIONS Change Point	REMARKS
	SEAT AND SEAT FITTINGS						
1	**Seat assembly—bucket—RH—Black with Red piping**	**AKE4487**	**1**	**1**			
2	Seat assembly—bucket—RH—Black with White piping	AKE4488		1			
3	Seat assembly—bucket—RH—Black with Pale Blue piping	AKE4489		1			
4	Seat assembly—bucket—RH—Red with Black piping	AKE4490		1			
5	Seat assembly—bucket—RH—Red with White piping	AKE4491		1			
6	Seat assembly—bucket—RH—Blue with Pale Blue piping	AKE4492		1			
7	**Cover—bucket seat squab—Black with Red piping**	**AKE4511**	**2**	**1**			
8	Cover—bucket seat squab—Black with White piping	AKE4512		1			
9	Cover—bucket seat squab—Black with Pale Blue piping	AKE4513		1			
10	Cover—bucket seat squab—Red with Black piping	AKE4514		1			
11	Cover—bucket seat squab—Red with White piping	AKE4515		1			
12	Cover—bucket seat squab—Blue with Pale Blue piping	AKE4516		1			
13	**Cover—bucket seat cushion—RH—Black with Red piping**	**AKE4499**	**3**	**1**			
14	Cover—bucket seat cushion—RH—Black with White piping	AKE4500		1			
15	Cover—bucket seat cushion—RH—Black with Pale Blue piping	AKE4501		1			
16	Cover—bucket seat cushion—RH—Red with Black piping	AKE4502		1			
17	Cover—bucket seat cushion—RH—Red with White piping	AKE4503		1			
18	Cover—bucket seat cushion—RH—Blue with Pale Blue piping	AKE4504		1			

Item No.	DESCRIPTION	Commencing (C) GHN3/101 Part Number	Illus. No.	Qty. per Veh.	MODIFICATIONS New Part Number	MODIFICATIONS Change Point	REMARKS
	Seat and Seat Fittings—*continued*						
1	**Seat assembly—bucket—LH—Black with Red piping**	**AKE4493**	4	1			
2	Seat assembly—bucket—LH—Black with White piping	AKE4494		1			
3	Seat assembly—bucket—LH—Black with Pale Blue piping	AKE4495		1			
4	Seat assembly—bucket—LH—Red with Black piping	AKE4496		1			
5	Seat assembly—bucket—LH—Red with White piping	AKE4497		1			
6	Seat assembly—bucket—LH—Blue with Pale Blue piping	AKE4498		1			
7	**Cover—bucket seat squab—Black with Red piping**	**AKE4511**		1			
8	Cover—bucket seat squab—Black with White piping	AKE4512		1			
9	Cover—bucket seat squab—Black with Pale Blue piping	AKE4513		1			
10	Cover—bucket seat squab—Red with Black piping	AKE4514		1			
11	Cover—bucket seat squab—Red with White piping	AKE4515		1			
12	Cover—bucket seat squab—Blue with Pale Blue piping	AKE4516		1			
13	**Cover—bucket seat cushion—LH—Black with Red piping**	**AKE4505**		1			
14	Cover—bucket seat cushion—LH—Black with White piping	AKE4506		1			
15	Cover—bucket seat cushion—LH—Black with Pale Blue piping	AKE4507		1			
16	Cover—bucket seat cushion—LH—Red with Black piping	AKE4508		1			
17	Cover—bucket seat cushion—LH—Red with White piping	AKE4509		1			
18	Cover—bucket seat cushion—LH—Blue with Pale Blue piping	AKE4510		1			
19	Slide assembly—seat catch RH	AHH5511	5	1			
20	Slide assembly—seat catch LH	AHH5512	6	1			
21	Slide—seat catch	AHH5510	7	2			
22	Screw—slide to seat	CMZ0418	8	8			
23	Washer—spring	LWZ204	9	8			
24	Nut—screw	FNZ104	10	8			
25	Rail—seat catch slide	AHH6160	11	4			
26	Screw—rail to floor	HZS0406	12	8			
27	Washer—spring	LWZ204	13	8			
28	Spacer—seat rail	AHH6939	14	8			

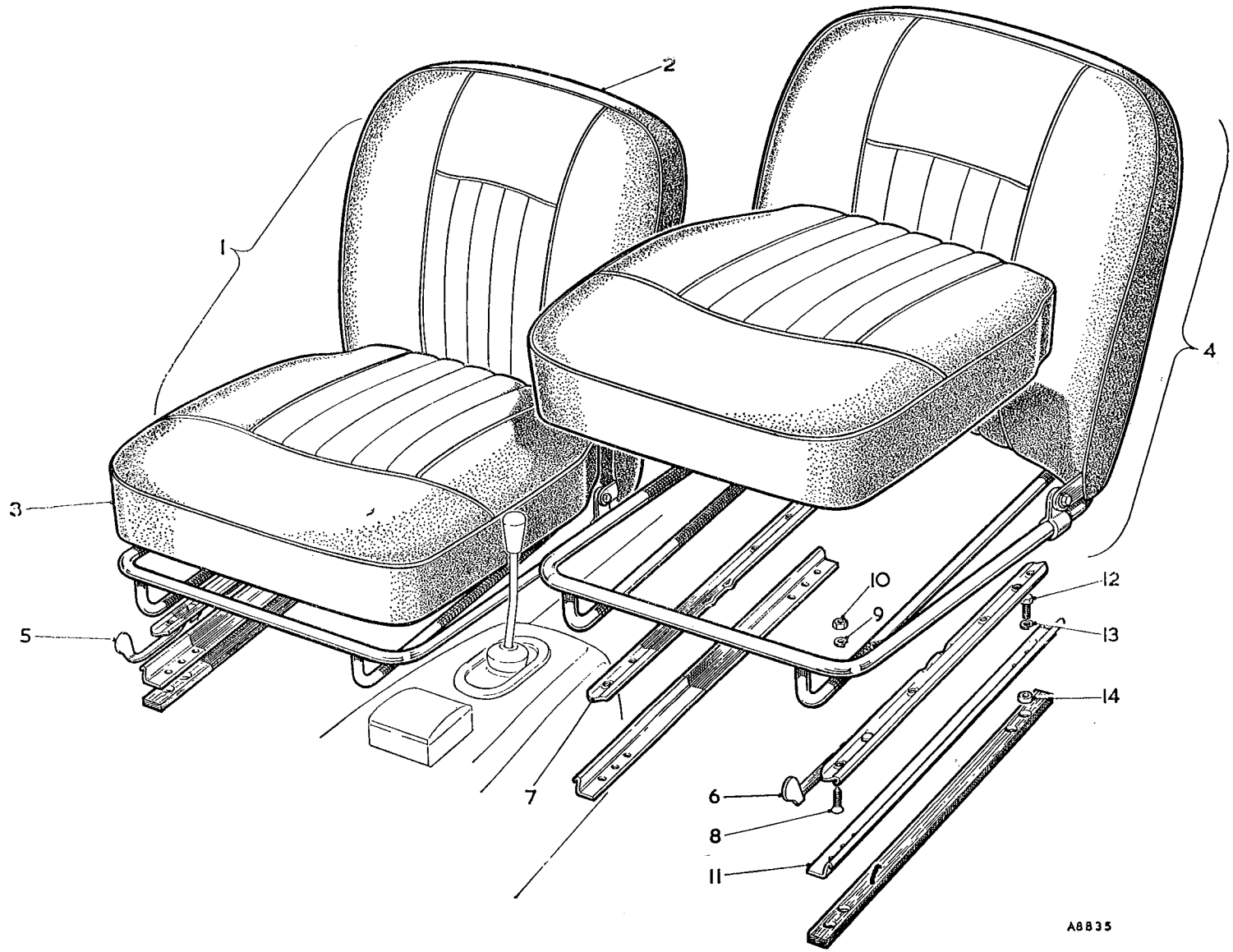

To face page R.26

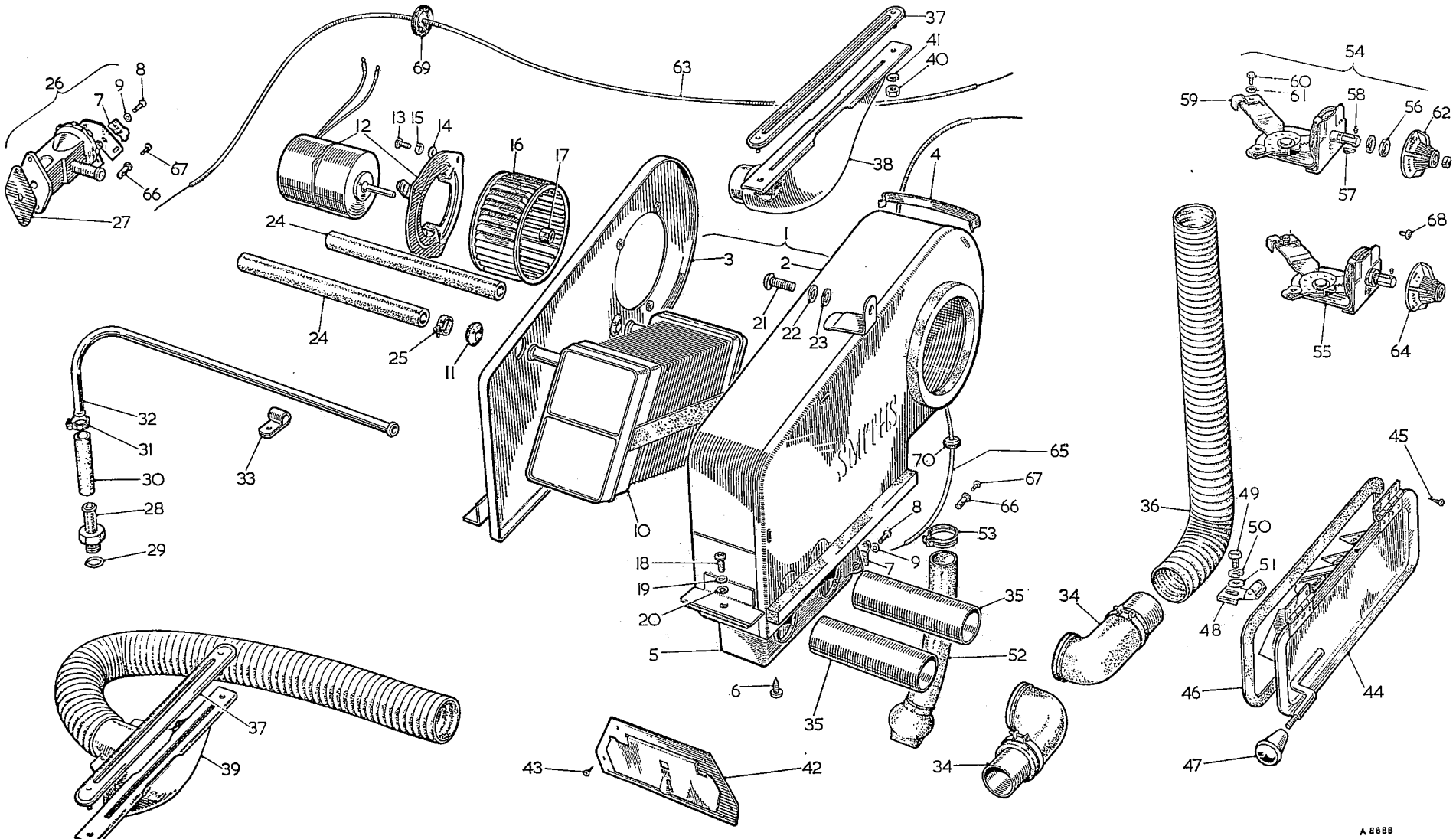

To face page R.27

Item No.	DESCRIPTION	Commencing (C) GHN3/101 Part Number	Illus. No.	Qty. per Veh.	MODIFICATIONS New Part Number	MODIFICATIONS Change Point	REMARKS
	HEATER AND VENTILATING EQUIPMENT						
1	**Heater assembly**	**BHA4325**	1	1			
2	Cover	17H2284	2	1			
3	Cover—motor side	17H2285	3	1			
4	Clip—cover	17H1595	4	5			
5	Duct—outlet	17H2286	5	1			
6	Screw—outlet duct	PTZ602	6	4			
7	Clamp—cable	27H1193	7	1			
8	Screw—cable clamp	7H6928	8	1			
9	Washer—shakeproof—screw	LWZ403	9	1			
10	Radiator	17H2287	10	1			
11	Washer—radiator pipe	7H1993	11	2			
12	Motor and mounting plate assembly	17H2288	12	1			
13	Screw—motor fixing	37H99	13	3			
14	Washer—plain—screw	PWZ203	14	3			
15	Washer—spring—screw	LWZ303	15	3			
16	Runner	17H1801	16	1			
17	Nut—collet	27H602	17	1			
18	Screw—heater unit to bulkhead	PMZ0310	18	4			
19	Washer—plain	PWZ103	19	4			
20	Washer—spring	LWZ203	20	4			
21	Screw—heater unit to bulkhead	PMZ0410	21	1			
22	Washer—plain	PWZ104	22	1			
23	Washer—spring	LWZ204	23	1			
24	Hose—water 8½″ × ½″	37H537	24	A/R			Available in multiples of feet
25	Clip—hose	27H1874	25	4			
26	**Valve assembly—water**	**BHA4132**	26	1			
27	Gasket—water valve	AHH5433	27	1			
28	Union—water	AMK8847	28	1			
29	Washer—union	300398	29	1			
30	Hose—water 2½″ × ½″	37H537	30	A/R			Available in multiples of feet
31	Clip—hose	27H1874	31	2			
32	Pipe—water return	AHH5435	32	1			
33	Clip—to inlet manifold	PCR0811	33	1			
34	Elbow—demister	14G3499	34	2			
35	Tube—connector	AHH6527	35	2			
36	Hose—air—demister	AHH6528	36	2			
37	**Escutcheon assembly—demister**	**AHH6190**	37	2			
38	**Nozzle assembly—demister RH**	**HZA546**	38	1			
39	**Nozzle assembly—demister LH**	**HZA547**	39	1			
40	Nut—escutcheon and demister nozzle to scuttle	FNZ103	40	4			
41	Washer—spring	LWZ203	41	4			
42	Door—heater outlet	13H59	42	2			
43	Screw—outlet door to air box	PTZ603	43	8			

Item No.	DESCRIPTION		Commencing (C) GHN3/101 Part Number	Illus. No.	Qty. per Veh.	MODIFICATIONS New Part Number	MODIFICATIONS Change Point	REMARKS
	Heater and Ventilating Equipment—*continued*							
1	**Door assembly—fresh-air vent**		**HZA433**	44	1			
2	Screw—door to bulkhead		PTZ603	45	4			
3	Seal—door		AHH6166	46	1			
4	Knob—door		AHH6165	47	1			
5	Spring assembly—fresh-air vent door		AHH6192	48	1			
6	Screw—spring to body bracket		HZS0405	49	1			
7	Washer—spring		LWZ204	50	1			
8	Washer—plain		PWZ104	51	1			
9	Tube—drain and dust valve assembly		AHH6176	52	1			
10	Clip—tube assembly to air box		HCS0709	53	1			
11	**Control—rotary—heat**	**RHD**	**BHA4326**	54	1			
12	**Control—rotary—air**	**RHD**	**BHA4327**	55	1			
13	**Control—rotary—heat**	**LHD**	**BHA4332**		1			
14	**Control—rotary—air**	**LHD**	**BHA4333**		1			
15	Nut—locking		27H1249	56	1			
16	Clip—knob		17H1601	57	1			
17	Pin—knob		17H1603	58	1			
18	Clamp—cable		27H1193	59	1			
19	Screw—clamp		27H1187	60	1			
20	Washer—spring		LWZ403	61	1			
21	Knob—heat		BHA4328	62	1			
22	Cable—heat control	**RHD**	BHA4331	63	1			
23	Knob—air		BHA4329	64	1			
24	Cable—air control		BHA4330	65	1			
25	Knob—heat		BHA4334		1			
26	Cable—heat control	**LHD**	BHA4337		1			
27	Knob—air		BHA4335		1			
28	Cable—air control		BHA4336		1			
29	Trunnion		24G1482	66	4			
30	Screw—trunnion		53K1016	67	4			
31	Rivet—heater control		AHH6276	68	2			
32	Grommet—heat control cable		RFR503	69	1			
33	Grommet—air control cable		RFN104	70	1			
34	Switch—heater				1			See page N.3

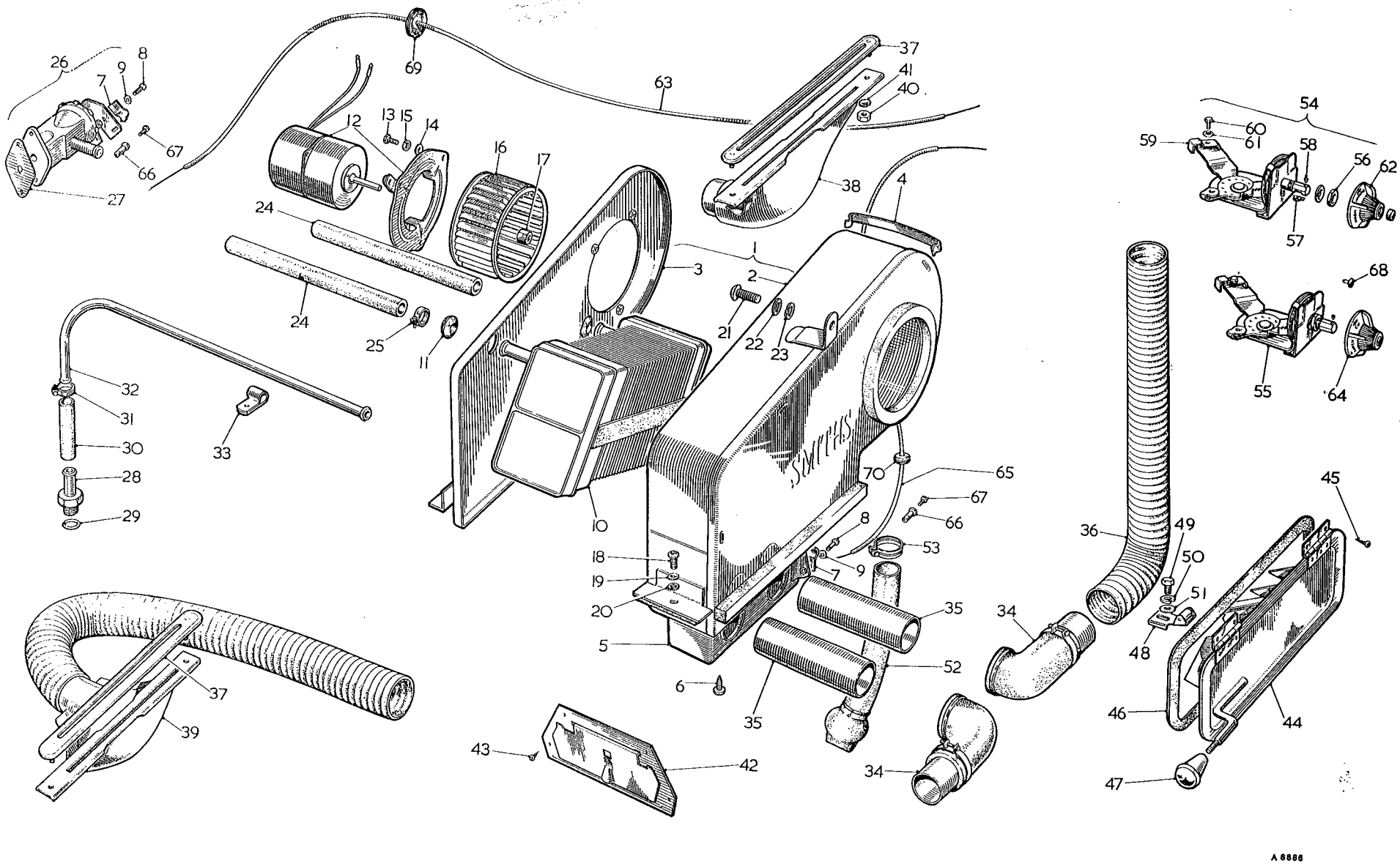

To face page R.28

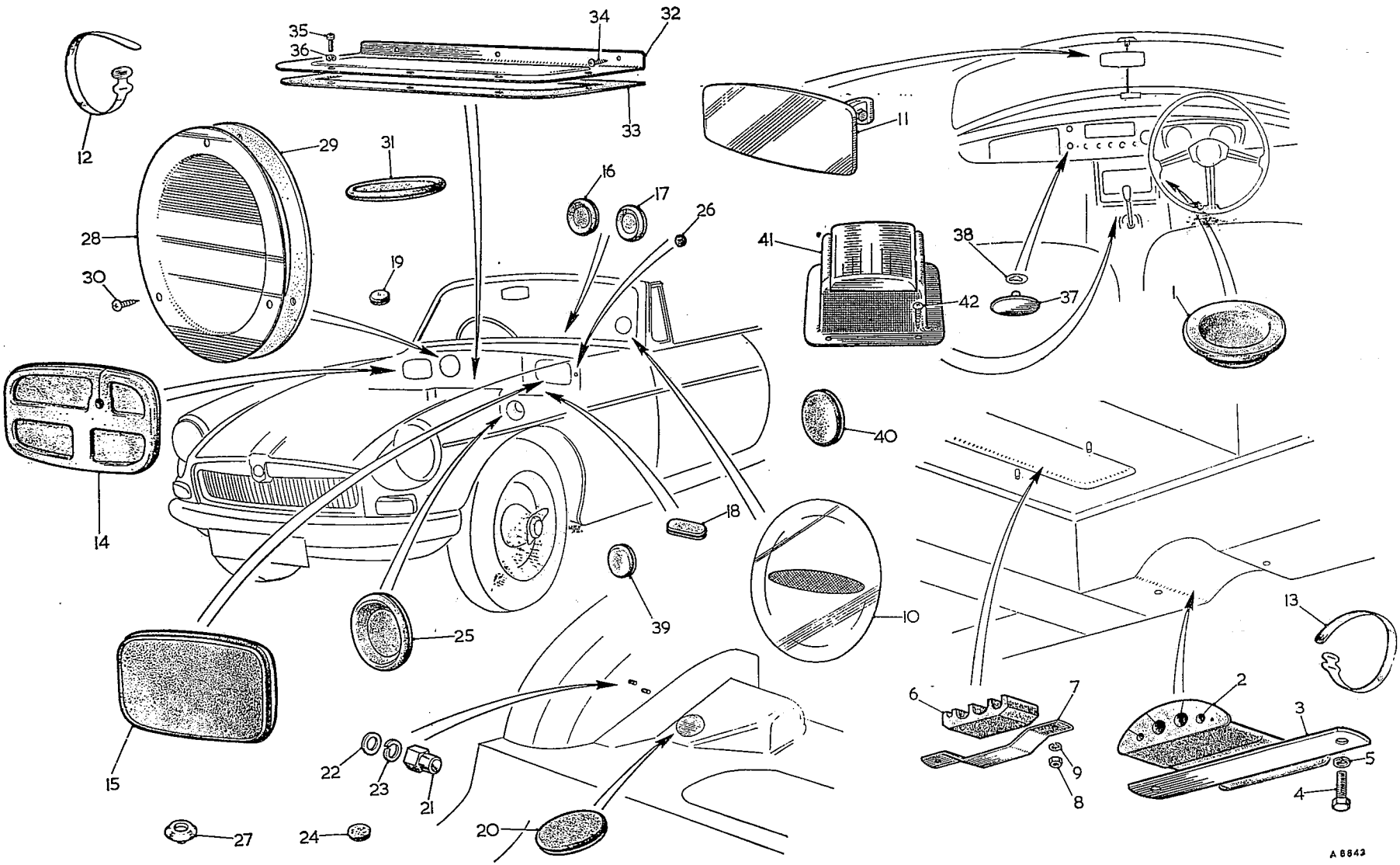

To face page R.29

Item No.	DESCRIPTION	Commencing (C) GHN3/101 Part Number	Illus. No.	Qty. per Veh.	MODIFICATIONS New Part Number	MODIFICATIONS Change Point	REMARKS
	SUNDRIES						
1	Plug—blanking—gearbox cover	AHH6507	1	1			
2	Grommet—services	AHH6284	2	1			
3	Plate—retaining—services grommet	AHH6285	3	1			
4	Screw—retaining plate to centre cross-member	HZS0506	4	2			
5	Washer—spring	LWZ205	5	2			
6	Grommet—services (small)	AHH6286	6	4			
7	Plate—retaining—services grommet (small)	AHH6287	7	4			
8	Nut—retaining plate to floor	FNZ104	8	8			
9	Washer—spring	LWZ204	9	8			
10	Holder—licence	14A3823	10	1			
11	Mirror—rear view	AHH6943	11	1			
12	Clip—pipes and wiring (under main floor)	AHH6728	12	3			
13	Clip—pipes and wiring (under rear floor)	AHH6728	13	2			
14	Plug—sealing master cylinder access hole (rubber) **RHD**	AHH6356	14	1			
15	Plug—sealing master cylinder access hole (rubber) **RHD**	14B630	15	1			
16	Plug—sealing master cylinder access hole (rubber) **LHD**	14B630		2			
17	Plug—blanking speedometer cable hole (rubber)	4G2541	16	1			
18	Plug—blanking LHD revolution counter cable hole (rubber) **RHD**	4G2541	17	1			
19	Plug—blanking LHD steering column mounting holes **RHD**	AHH6478	18	2			
20	Plug—blanking cable guide hole	RFN206	19	1			
21	Plug—blanking—rear floor shock absorber filler hole	RFN224	20	2			
22	Nut—dome—safety strap weld on rear wheel arch	14B2685	21	4			
23	Washer—plain	PWZ105	22	4			
24	Washer—spring	LWZ205	23	4			
25	Plug—blanking—safety strap	RFR207	24	2			
26	Plug—blanking—steering column	AHA5437	25	1			
27	Plug—blanking master cylinder holes in bulkhead	RFN204	26	2			
28	Plug—sealing paint drain holes $\frac{3}{8}$" (9·52 mm.)	CFP375	27	4			
29	Plug—sealing paint drain holes $\frac{5}{8}$" (15·87 mm.)	CFP625		1			
30	Plug—sealing paint drain holes $\frac{3}{4}$" (19·05 mm.)	CFP750		3			
31	Plug—sealing paint drain holes 1" (25·4 mm.)	CFP1000		3			
32	Button—blanking—starter and ignition switch hole	BHA4251		1			When steering lock fitted

Item No.	DESCRIPTION	Commencing (C) GHN3/101 Part Number	Illus. No.	Qty. per Veh.	MODIFICATIONS New Part Number	MODIFICATIONS Change Point	REMARKS
	Sundries—*continued*						
1	Plate—cover—air box	AHH6294	28	1			Not required when heater is fitted
2	Gasket—cover-plate—air box	AHH6295	29	1			
3	Screw	PTZ1003	30	3			
4	Grommet—blanking—air box access plate	4G9763	31	1			
5	Plate—cover—heater aperture	AHH6260	32	1			
6	Gasket—cover-plate—heater aperture	AHH6290	33	1			
7	Screw—cover-plate to bulkhead	PTZ1003	34	3			
8	Screw—cover-plate to bulkhead front	PMZ0308	35	5			
9	Washer—spring	LWZ203	36	5			
10	Plug—heater controls—fascia	BDH1750	37	2			
11	Push-on fix—plug	PFR108	38	2			
12	Ferrule—bulkhead panel	RFN210	39	1			
13	Ferrule—centre panel pedal box	RFR216	40	1			
14	Ashtray	AHH5539	41	1			Optional extra
15	Screw—ashtray to tunnel	PTP606	42	4			

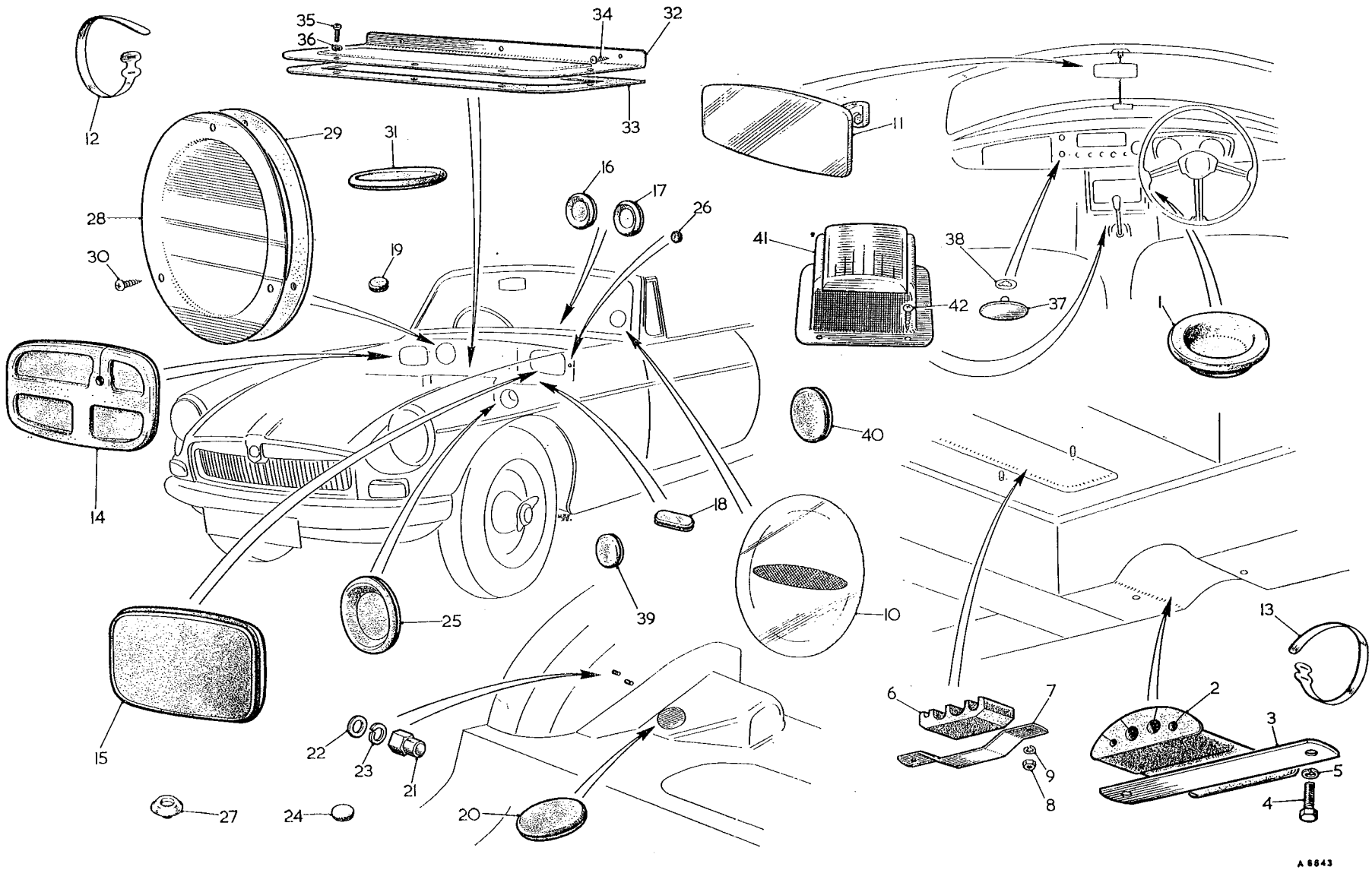

To face page R.30

Item No.	DESCRIPTION	Commencing (C) GHN3/101 Part Number	Illus. No.	Qty. per Veh.	MODIFICATIONS New Part Number	MODIFICATIONS Change Point	REMARKS
	TOOLS						
1	Bag—tool	AHH6540		1			
2	Jack—side lift	AHH6538		1			
3	Spanner—wheel nut	AHH6539		1			Disc wheels
4	Lever—hub cap remover	ACA5432		1			Disc wheels
5	Spanner—box—sparking plug	1B8995		1			
6	Tommy-bar—box spanner	ACA5216		1			
7	Spanner—hub cap	AHH5839		1			Germany and Switzerland
8	Hammer—copper	11B5166		1			Wire wheels only
	SERVICE TOOLS						
	Reference must be made to Publication AKD770						
	LITERATURE						
	Reference must be made to Publication AKD858						
	PAINT						
9	Tartan Red (Code RD.9)						Refer to B.M.C. Service Paint Scheme Book
10	Old English White (Code WT.3)						Refer to B.M.C. Service Paint Scheme Book
11	Chelsea Grey (Code GR.15)						Refer to B.M.C. Service Paint Scheme Book
12	Iris Blue (Code BU.12)						Refer to B.M.C. Service Paint Scheme Book
13	Black (Code BK.1)						Refer to B.M.C. Service Paint Scheme Book
							SE ENDVIDRE PMB732

The illustrations herewith are for insertion in the M.G. M.G.B. Service Parts List AKD 3227, opposite the text pages to which they refer.

PRINTED IN ENGLAND BY
THE NUFFIELD PRESS LIMITED
COWLEY, OXFORD
27/21 (42251) 4/62—5,900